Internal Use Only

http://biz.lgservice.com

MULTI V™ System
Indoor Unit R410A
SERVICE MANUAL R410A

MODEL : ARNU Series
URNU Series

CAUTION

Before Servicing the unit, read the safety precautions in General SVC manual.
Only for authorized service personnel.

TABLE OF CONTENTS

Part 1 General Information 3

Model Names 4

External Appearance 5

Nomenclature 6

Part 2 Indoor Units 7

Ceiling Mounted Cassette Type (1 way) 8
Ceiling Mounted Cassette Type (2 way) 16
Ceiling Mounted Cassette Type (4 way)(1) 21
Ceiling Mounted Cassette Type (4 way)(2) 27
Art Cool Type(Mirror) 34
Art Cool Type(Gallery) 45
Ceiling Concealed Duct Type (Low static) 55
Ceiling Concealed Duct Type (Built in) 61
Ceiling Concealed Duct Type (High static) 67
Wall Mounted Type 76
Ceiling & Floor Ceiling Suspended 87
Floor Standing Type 94
Vertical Air Handling Unit 101

Part 3 Trouble shooting guide 109

Copyright ©2010 LG Electronics. Inc. All right reserved.
Only for training and service purposes

LGE Internal Use Only

Part 1
General Information

1. Model Names 4

2. External Appearance 5

3. Nomenclature 6

Copyright ©2010 LG Electronics. Inc. All right reserved.
Only for training and service purposes

LGE Internal Use Only

1. Model Names

Category		Chassis Name	Capacity(Btu/h(kW))													
			7.5 (2.2)	9.6 (2.8)	12.3 (3.6)	15.4 (4.5)	19.1 (5.6)	24.2 (7.1)	28.0 (8.2)	30.0 (8.8)	36.2 (10.6)	42.0 (12.3)	48.1 (14.1)	54.0 (15.8)	76.4 (22.4)	95.5 (28.0)
Wall Mounted (General)		SE	ARNU07 3SE*2	ARNU09 3SE*2	ARNU12 3SE*2	ARNU15 3SE*2										
		S5					ARNU18 3S5*2	ARNU24 3S5*2								
ART COOL	Mirror	SE	ARNU07 3SE*2	ARNU09 3SE*2	ARNU12 3SE*2	ARNU15 3SE*2										
		S8					ARNU18 3S8*2	ARNU24 3S8*2								
Ceiling Cassette	1 Way	TJ	ARNU07 3TJ*2	ARNU09 3TJ*2	ARNU12 3TJ*2											
	2 Way	TL					ARNU18 3TL*2	ARNU24 3TL*2								
	4 Way	TR	ARNU07 3TR*2	ARNU09 3TR*2	ARNU12 3TR*2											
		TQ				ARNU15 3TQ*2	ARNU18 3TQ*2									
		TP						ARNU24 3TP*2	ARNU28 3TP*2							
		TN									ARNU36 3TN*2					
		TM										ARNU42 3TM*2	ARNU48 3TM*2			
Ceiling Concealed Duct	High Static	BH	ARNU07 3BHA2	ARNU09 3BHA2	ARNU12 3BHA2	ARNU15 3BHA2	ARNU18 3BHA2	ARNU24 3BHA2								
		BG							ARNU28 3BGA2		ARNU36 3BGA2	ARNU42 3BGA2				
		BR											ARNU483 BRA2			
		B8													URNU76 3B8A2	URNU96 3B8A2
	Low Static	B1	ARNU07 3B1G2	ARNU09 3B1G2	ARNU12 3B1G2	ARNU15 3B1G2										
		B2					ARNU18 3B2G2	ARNU24 3B2G2								
	Built In	B3	ARNU07 3B3G2	ARNU09 3B3G2	ARNU12 3B3G2	ARNU15 3B3G2										
		B4					ARNU18 3B4G2	ARNU24 3B4G2								
Ceiling & Floor		VE		ARNU09 3VEA2	ARNU12 3VEA2											
Ceiling Suspended		VJ					ARNU18 3VJA2									
Floor Standing	With Case	CE	ARNU07 3CEA2	ARNU09 3CEA2	ARNU12 3CEA2	ARNU15 3CEA2										
		CF					ARNU18 3CFA2	ARNU24 3CFA2								
	Without Case	CE	ARNU07 3CEU2	ARNU09 3CEU2	ARNU12 3CEU2	ARNU15 3CEU2										
		CF					ARNU18 3CFU2	ARNU24 3CFU2								
Vertical AHU		NJ					ARNU18 3NJA2	ARNU24 3NJA2		ARNU30 3NJA2	ARNU36 3NJA2					
		NK										ARNU42 3NKA2	ARNU48 3NKA2	ARNU54 3NKA2		

❊ *ART COOL- SE/S8(* R:Mirror, V:Silver, B : Blue), SF(* E:Red, V:Silver, G:Gold , 1: Kiss (Photo changeable))
*Wall Mounted- A: Basic, L:Plasma, *Ceiling Cassette- A: Basic, C:Plasma

Copyright ©2010 LG Electronics. Inc. All right reserved.
Only for training and service purposes

LGE Internal Use Only

2. External Appearance

Ceiling Cassette- 1Way

ARNU073TJ*2
ARNU093TJ*2
ARNU123TJ*2

* A:Basic, C:Plasma

Ceiling Concealed Duct - High Static

ARNU073BHA2
ARNU093BHA2
ARNU123BHA2
ARNU153BHA2
ARNU183BHA2
ARNU243BHA2
ARNU283BGA2
ARNU363BGA2
ARNU423BGA2
ARNU483BRA2
URNU763B8A2
URNU963B8A2

Ceiling Cassette- 4Way

ARNU073TR*2
ARNU093TR*2
ARNU123TR*2
ARNU153TQ*2
ARNU183TQ*2
ARNU243TP*2
ARNU283TP*2
ARNU363TN*2
ARNU423TM*2
ARNU483TM*2

* A:Basic, C:Plasma

Wall Mounted

ARNU073SE*2
ARNU093SE*2
ARNU123SE*2
ARNU153SE*2
ARNU183S5*2
ARNU243S5*2

* A:Basic, L:Plasma

Ceiling Concealed Duct - Low Static

ARNU073B1G2
ARNU093B1G2
ARNU123B1G2
ARNU153B1G2
ARNU183B2G2
ARNU243B2G2

ART COOL Mirror

ARNU073SE*2
ARNU093SE*2
ARNU123SE*2
ARNU153SE*2
ARNU183S8*2
ARNU243S8*2

* R:Mirror
V:Silver
B : Blue

Ceiling Concealed Duct – Built-in

ARNU073B3G2
ARNU093B3G2
ARNU123B3G2
ARNU153B3G2
ARNU183B4G2
ARNU243B4G2

Ceiling & Floor

ARNU093VEA2
ARNU123VEA2

Ceiling Suspended

ARNU183VJA2
ARNU243VJA2

Floor Standing

With case

ARNU073CEA2
ARNU093CEA2
ARNU123CEA2
ARNU153CEA2
ARNU183CFA2
ARNU243CFA2

Without case

ARNU073CEU2
ARNU093CEU2
ARNU123CEU2
ARNU153CEU2
ARNU183CFU2
ARNU243CFU2

Ceiling Cassette -2Way

ARNU183TL*2
ARNU243TL*2

* A:Basic, C:Plasma

Vertical AHU

ARNU183NJA2
ARNU243NJA2
ARNU303NJA2
ARNU363NJA2
ARNU423NKA2
ARNU483NKA2
ARNU543NKA2

Copyright ©2010 LG Electronics. Inc. All right reserved.
Only for training and service purposes

LGE Internal Use Only

3. Nomenclature

ARN	U	07	3	TJ	A	2

Generation

Combinations of functions
A: Basic function
L: Neo Plasma(Wall Mounted)
C:Plasma(Ceiling Cassette)
G: Low Static
U: Floor Standing without Case
ART COOL Type Panel Color
B:Blue R:Mirror V: Silver

Chassis Name

Electrical Ratings
1:1Ø, 115V, 60Hz 2: 1Ø, 220V, 60Hz
6:1Ø, 220 - 240V, 50Hz 7: 1Ø, 100V, 50/60Hz
3:1Ø, 208/230V, 60Hz

Total Cooling Capacity in Btu/h Class
EX) 18,000 Btu/h Class → '18'

Combination of Inverter Type and
Cooling Only or Heat Pump
N: AC Inverter and H/P V: AC Inverter and C/O
U: DC Inverter and H/P and C/O

MULTI V™ System with
Indoor Unit using R410A
❊ LGETA:U Ex) URN

Copyright ©2010 LG Electronics. Inc. All right reserved.
Only for training and service purposes

LGE Internal Use Only

Part 2
Indoor Units

Ceiling Cassette
1 Way 8
2 Way 13
4 Way(1) 20
4 Way(2) 23
Art Cool Series
ART COOL Miror 34
ART COOL Gallery 45
Ceiling Concealed Duct
Low Static 55
Built In 62
High Static 67
Wall Mounted(General)
Wall Mounted 76
Ceiling & Floor
Ceiling & Floor
Ceiling Suspended 87
Floor Standing
Floor Standing 94
Vertical Air Handling Unit 117

Copyright ©2010 LG Electronics. Inc. All right reserved.
Only for training and service purposes

LGE Internal Use Only

Ceiling Mounted Cassette Type (1Way)

1. Functions 9
2. Operation Details.....10
3. Dimensions 12

Copyright ©2010 LG Electronics. Inc. All right reserved.
Only for training and service purposes

LGE Internal Use Only

1. Functions

Indoor Unit

Operation ON/OFF by Remote controller

Sensing the Room Temperature
- Room temperature sensor. (Thermistor)

Room temperature control
- Maintains the room temperature in accordance with the Setting Temperature.

Starting Current Control
- Indoor fan is delayed for 5 seconds at the starting.

Indoor Fan Speed Control
- Jet, High, Med, Low, Lolow

Soft Dry Operation Mode
- Intermittent operation of fan at low speed.

Airflow Direction Control
- The louver can be set at swing up and down automatically.

Auto Restart
- Although the air-conditioner is turned off by a power failure, it is restarted automatically previous operation mode after power supply.

Deice (defrost) control (Heating)
- Both the indoor and outdoor fan stops during defrosting.
- Hot start after defrost ends.

Hot-start Control (Heating)
- The indoor fan does not rotate until the evaporator piping temperature will be reached at 25°C(76°F).

Compact and light design
- To install a unit is very convenient because of smaller size than textile.

Low noise
- The most advanced low-noise design.
- The adoption of turbo fan and round type heat exchanger give the quietest operation.

Long life filter
- Long life wrinkle(type) and washable and anti-bacteria filter is adopted.

High head Drain pump
- Built-in drain pump automatically drains water.
- A standard drain-head height of up to 700mm(27-9/16inch) is possible.

High-Ceiling corresponding Function
- According to the height of ceiling, the RPM of indoor fan motor is selected to increase air reaching distance.

Central Control(Optional)
- It is operating individually or totally by central control function.

Copyright ©2010 LG Electronics. Inc. All right reserved.
Only for training and service purposes

LGE Internal Use Only

2. Operation Detail

(1) The function of main control

■ Auto Swing Control

• This function is to swing the louver up and down automatically.

■ Soft-Dry Operation

• The indoor fan speed is automatically set to the low, so the shift of the indoor fan speed is impossible because of already being set to the best speed for Dry Operation by microcontroller control.

■ Cooling Mode Operation

• When selecting the Cooling(❄) Mode Operation, the unit will operate according to the setting by the remote controller and the operation diagram is as following

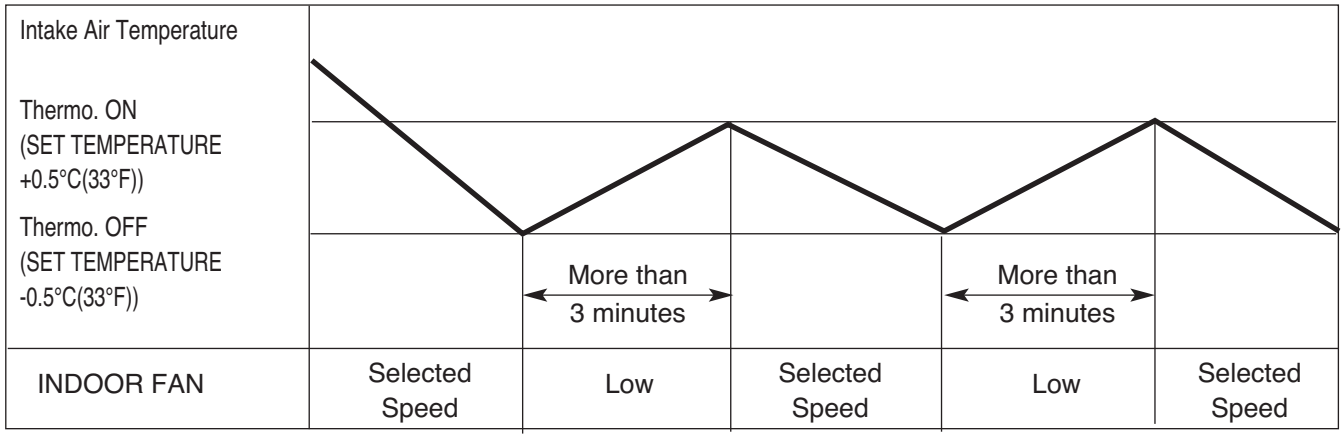

	Thermal ON	Thermal OFF
Indoor Unit mode	ST+0.5	ST-0.5
2TH (Remo.+Indoor)	To be selected higher temperature contrast Indoor Unit and Remo.	To be selected higher temperature contrast Indoor Unit and Remo.
Remo. Mode	ST+0.5	ST-0.5

Copyright ©2010 LG Electronics. Inc. All right reserved.
Only for training and service purposes

LGE Internal Use Only

■ Heating Mode Operation

The unit will operate according to the setting by the remote controller and the operation diagram is shown as following.

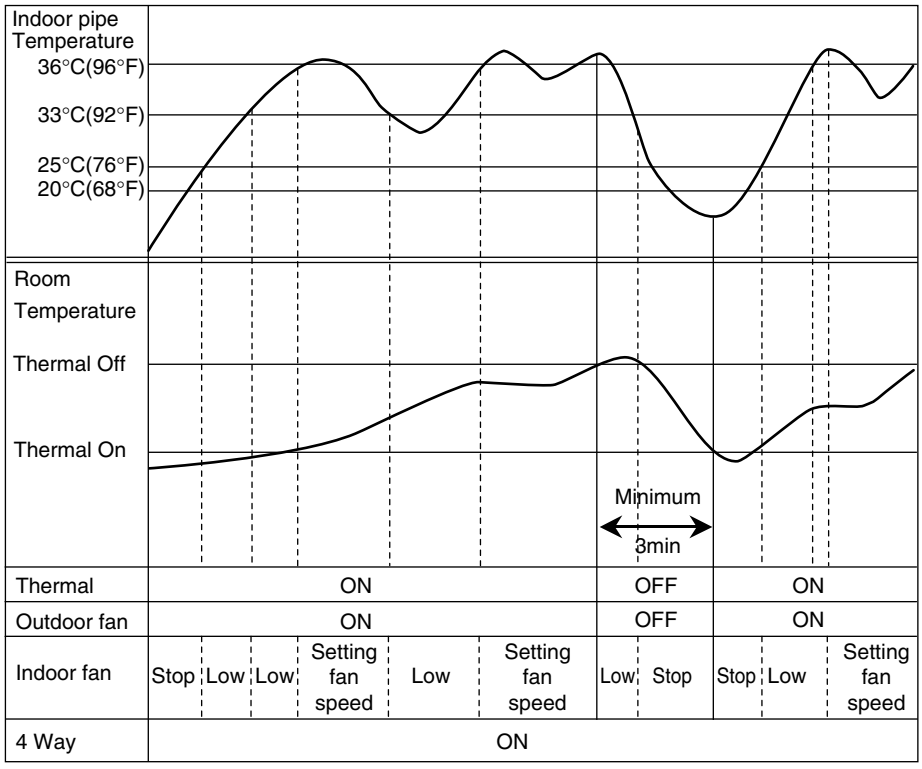

	Thermal ON	Thermal OFF
Indoor Unit mode	ST+2	ST+4
2TH (Remo.+Indoor)	To be selected lower temperature contrast Indoor Unit and Remo.	To be selected lower temperature contrast Indoor Unit and Remo.
Remo. mode	ST+0	ST+2

■ Hot-start Control

- The indoor fan does no rotate until the evaporator piping temperature will be reached to 25°C(76°F).
- The operation diagram is as following.

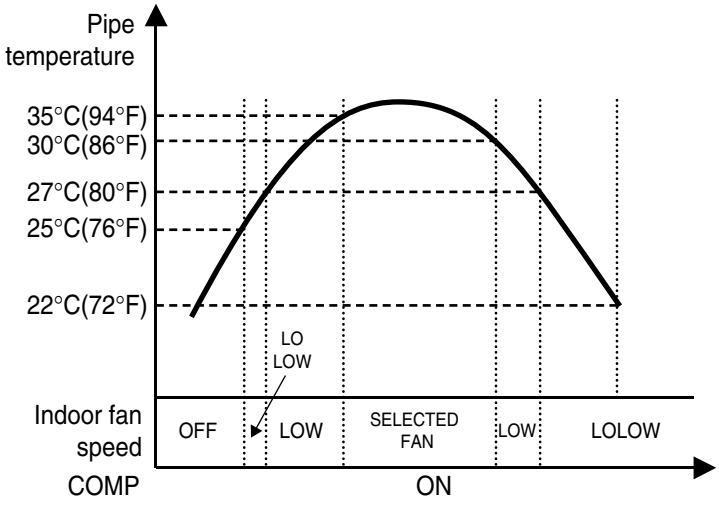

Copyright ©2010 LG Electronics. Inc. All right reserved.
Only for training and service purposes

LGE Internal Use Only

3. Dimensions

Ceiling Cassette 1-way

ARNU07GTU*2
ARNU09GTU*2
ARNU12GTU*2

(unit : mm)

Number	Name	Description
1	Liquid pipe connection	Unit size(7k, 9k, 12k):ø6.35
2	Gas pipe connection	Unit size(7k, 9k, 12k):ø12.7
3	Air suction grill	
4	Air discharge grill	

▣ Note

1. Unit should be installed in compliance with the installation manual in the product box.
2. Unit shall be grounded in accordance with the local regulations or applicable national codes.

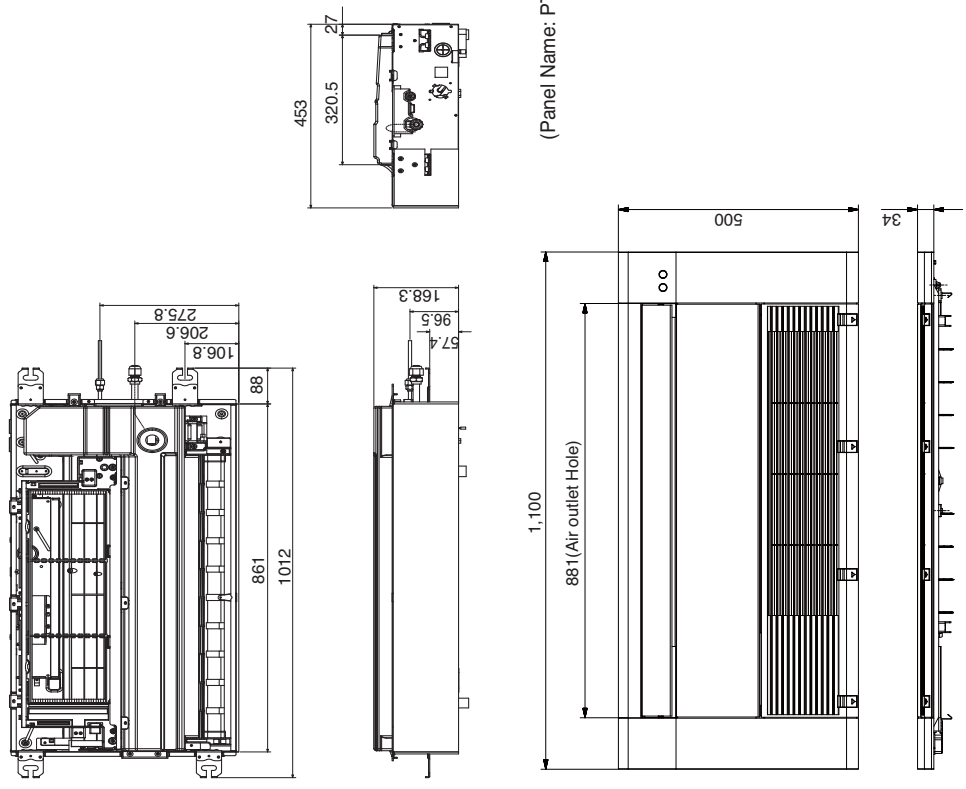

LG Electronics

76, Seongsan-dong, Changwon City, Gyeongnam, 641-713, Korea

CHASSIS CODE: TU

Copyright ©2010 LG Electronics. Inc. All right reserved.
Only for training and service purposes

LGE Internal Use Only

Ceiling Cassette 1-way

ARNU07GTU*2
ARNU09GTU*2
ARNU12GTU*2

(unit : mm)

Number	Name	Description
1	Liquid pipe connection	Unit size(7k, 9k, 12k):ø6.35
2	Gas pipe connection	Unit size(7k, 9k, 12k):ø12.7
3	Air suction grill	
4	Air discharge grill	

■ Note

1. Unit should be installed in compliance with the installation manual in the product box.
2. Unit shall be grounded in accordance with the local regulations or applicable national codes.

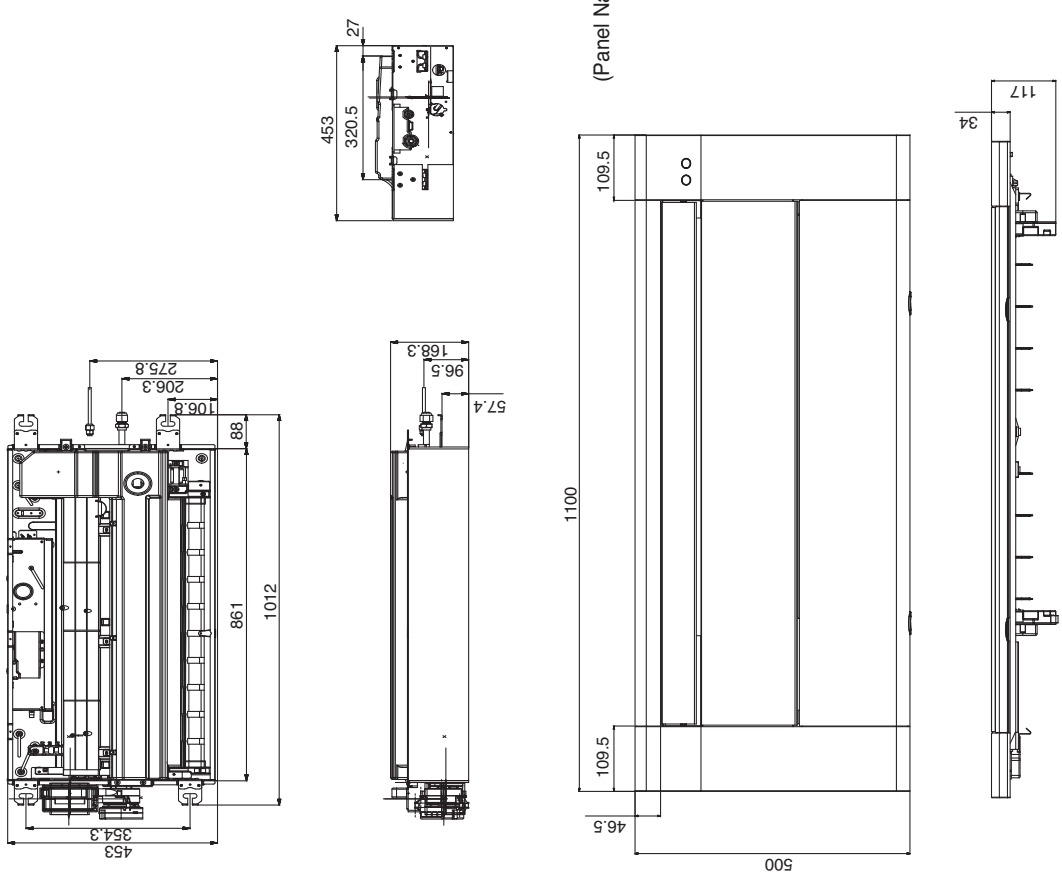

LG Electronics

76, Seongsan-dong, Changwon City, Gyeongnam, 641-713, Korea

CHASSIS CODE: TU

Copyright ©2010 LG Electronics. Inc. All right reserved.
Only for training and service purposes

LGE Internal Use Only

Ceiling Cassette 1-way

ARNU18GTT*2
ARNU24GTT*2

(unit : mm)

Number	Name	Description
1	Liquid pipe connection	Unit size(18k):ø6.35, (24k):ø9.52
2	Gas pipe connection	Unit size(18k):ø12.7, (24k):ø15.88
3	Air suction grill	
4	Air discharge grill	

▣ Note

1. Unit should be installed in compliance with the installation manual in the product box.
2. Unit shall be grounded in accordance with the local regulations or applicable national codes.

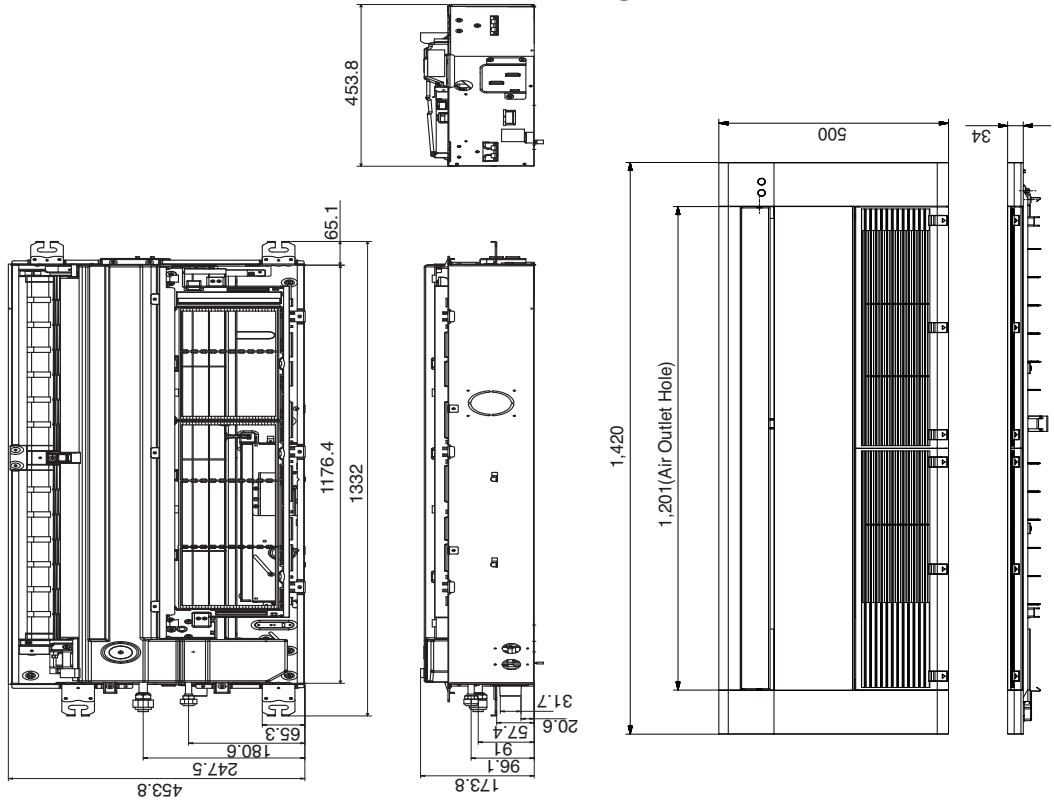

(Panel Name: PT-UTC)

LG Electronics

76, Seongsan-dong, Changwon City, Gyeongnam, 641-713, Korea

CHASSIS CODE: TT

Copyright ©2010 LG Electronics. Inc. All right reserved.
Only for training and service purposes

LGE Internal Use Only

Ceiling Cassette 1-way

ARNU18GTT*2
ARNU24GTT*2

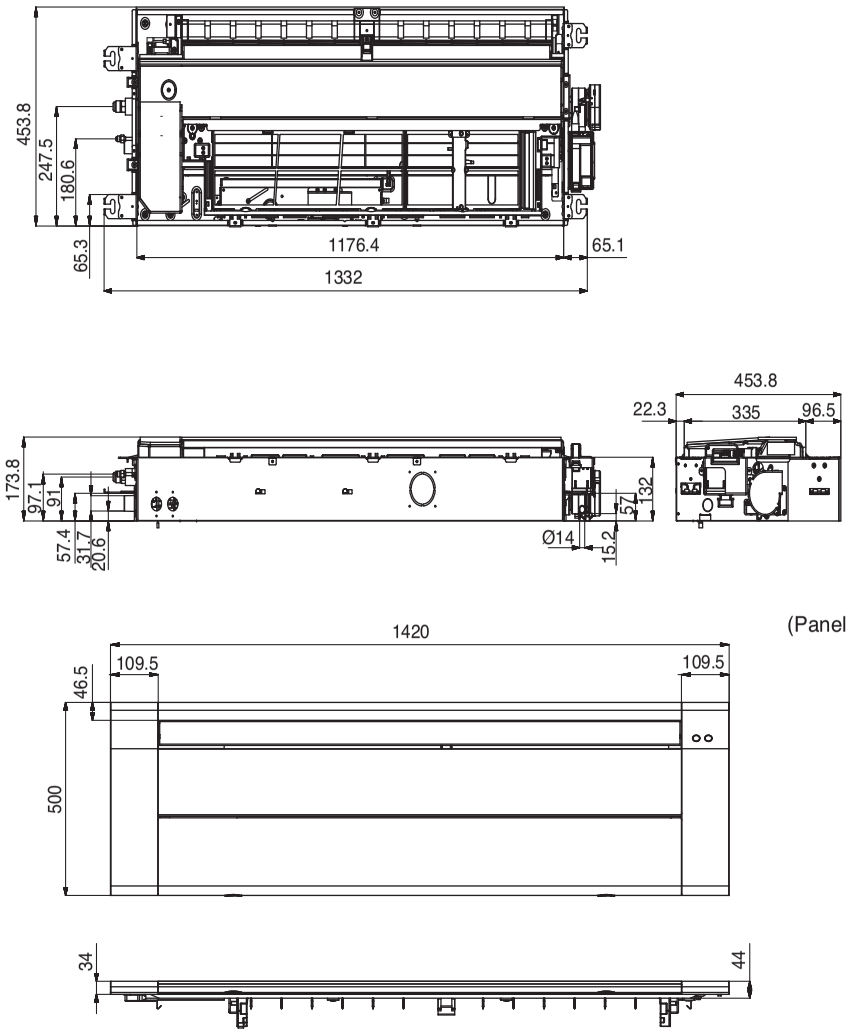

(Panel Name: PT-UTD)

(unit : mm)

Number	Name	Descripition
1	Liquid pipe connection	Unit size(18k):ø6.35, (24k):ø9.52
2	Gas pipe connection	Unit size(18k):ø12.7, (24k):ø15.88
3	Air suction grill	
4	Air discharge grill	

▣ Note

1. Unit should be installed in compliance with the installation manual in the product box.
2. Unit shall be grounded in accordance with the local regulations or applicable national codes.

LG Electronics

76, Seongsan-dong, Changwon City, Gyeongnam, 641-713, Korea

CHASSIS CODE: TT

Copyright ©2010 LG Electronics. Inc. All right reserved.
Only for training and service purposes

LGE Internal Use Only

Ceiling Mounted Cassette Type (2Way)

1. Functions 17
2. Operation Details.....18
3. Dimensions 20

Copyright ©2010 LG Electronics. Inc. All right reserved.
Only for training and service purposes

LGE Internal Use Only

1. Functions

Indoor Unit

Operation ON/OFF by Remote controller

Sensing the Room Temperature
- Room temperature sensor. (Thermistor)

Room temperature control
- Maintains the room temperature in accordance with the Setting Temperature.

Starting Current Control
- Indoor fan is delayed for 5 seconds at the starting.

Indoor Fan Speed Control
- Jet, High, Med, Low, Lolow

Soft Dry Operation Mode
- Intermittent operation of fan at low speed.

Airflow Direction Control
- The louver can be set at swing up and down automatically.

Auto Restart
- Although the air-conditioner is turned off by a power failure, it is restarted automatically previous operation mode after power supply.

Deice (defrost) control (Heating)
- Both the indoor and outdoor fan stops during defrosting.
- Hot start after defrost ends.

Hot-start Control (Heating)
- The indoor fan does not rotate until the evaporator piping temperature will be reached at 25°C(76°F).

Compact and light design
- To install a unit is very convenient because of smaller size than textile.

Low noise
- The most advanced low-noise design.
- The adoption of turbo fan and round type heat exchanger give the quietest operation.

Long life filter
- Long life wrinkle(type) and washable and anti-bacteria filter is adopted.

High head Drain pump
- Built-in drain pump automatically drains water.
- A standard drain-head height of up to 700mm (27-9/16inch) is possible.

High-Ceiling corresponding Function
- According to the height of ceiling, the RPM of indoor fan motor is selected to increase air reaching distance.

Central Control(Optional)
- It is operating individually or totally by central control function.

Copyright ©2010 LG Electronics. Inc. All right reserved.
Only for training and service purposes

LGE Internal Use Only

2. Operation Detail

(1) The function of main control

■ Auto Swing Control

• This function is to swing the louver up and down automatically.

■ Soft-Dry Operation

• The indoor fan speed is automatically set to the low, so the shift of the indoor fan speed is impossible because of already being set to the best speed for Dry Operation by microcontroller control.

■ Cooling Mode Operation

• When selecting the Cooling(❄) Mode Operation, the unit will operate according to the setting by the remote controller and the operation diagram is as following

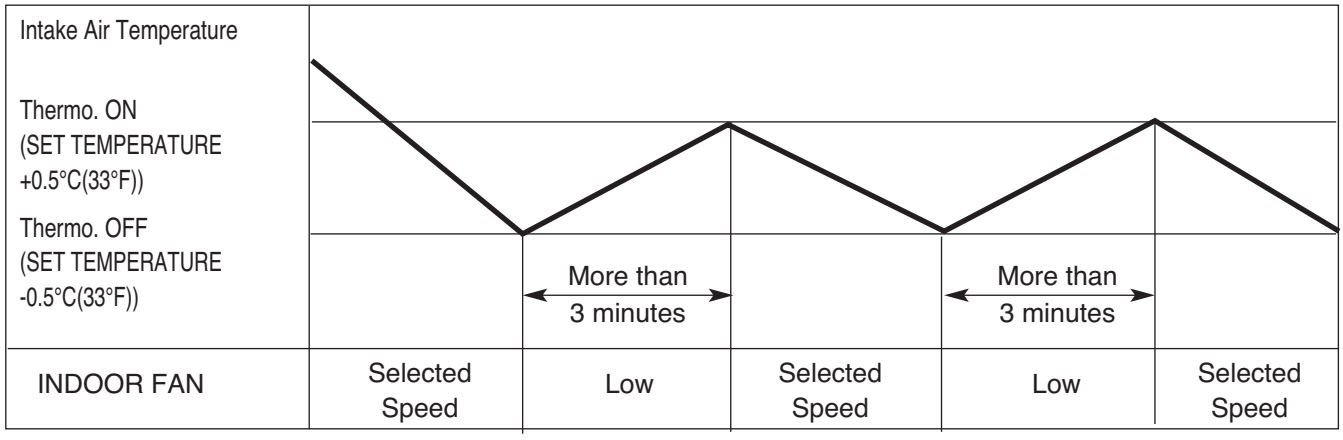

	Thermal ON	Thermal OFF
Indoor Unit mode	ST+0.5	ST-0.5
2TH (Remo.+Indoor)	To be selected higher temperature contrast Indoor Unit and Remo.	To be selected higher temperature contrast Indoor Unit and Remo.
Remo. Mode	ST+0.5	ST-0.5

Copyright ©2010 LG Electronics. Inc. All right reserved.
Only for training and service purposes

LGE Internal Use Only

■ Heating Mode Operation

The unit will operate according to the setting by the remote controller and the operation diagram is shown as following.

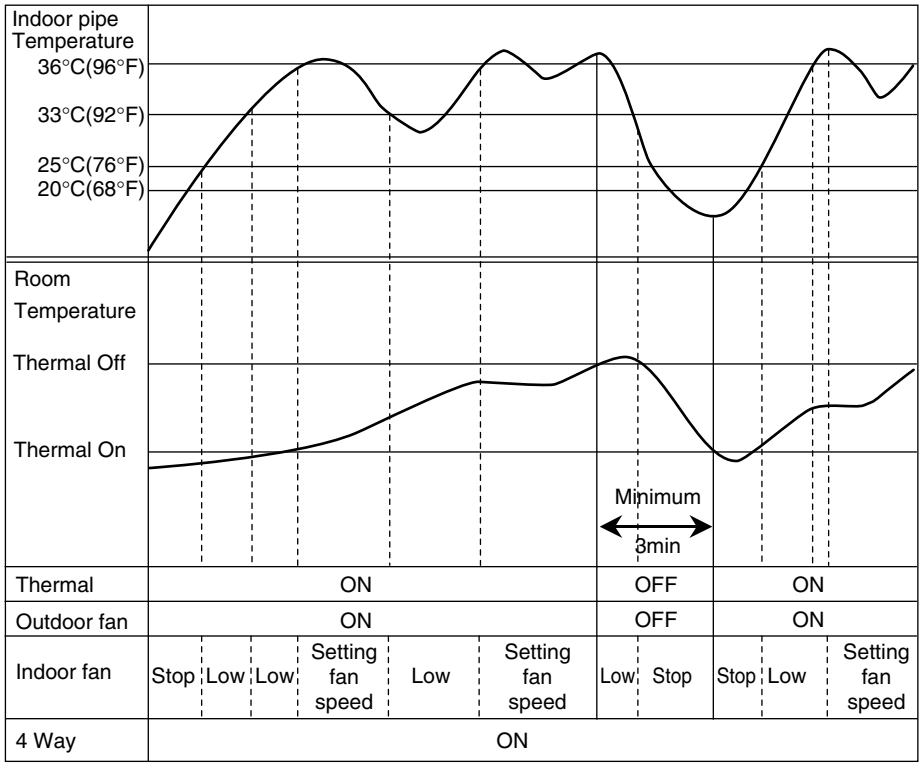

	Thermal ON	Thermal OFF
Indoor Unit mode	ST+2	ST+4
2TH (Remo.+Indoor)	To be selected lower temperature contrast Indoor Unit and Remo.	To be selected lower temperature contrast Indoor Unit and Remo.
Remo. mode	ST+0	ST+2

■ Hot-start Control

- The indoor fan does no rotate until the evaporator piping temperature will be reached to 25°C(76°F).
- The operation diagram is as following.

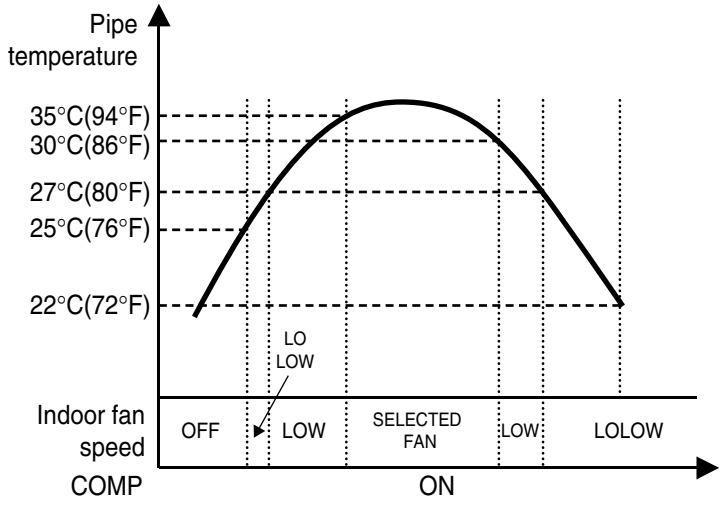

Copyright ©2010 LG Electronics. Inc. All right reserved.
Only for training and service purposes

LGE Internal Use Only

3. Dimensions

Ceiling Cassette 2-way

ARNU183TL*2
ARNU243TL*2

[Unit : mm(inch)]

Number	Name	Descripition
1	Liquid pipe connection	(18k) ø6.35(1/4), (24k)ø9.52(3/8)
2	Gas pipe connection	(18k) ø12.7(1/2), (24k)ø15.88(5/8)
3	Air suction grill	
4	Air discharge grill	

▣ Note

1. Unit should be installed in compliance with the installation manual in the product box.
2. Unit shall be grounded in accordance with the local regulations or applicable national codes.

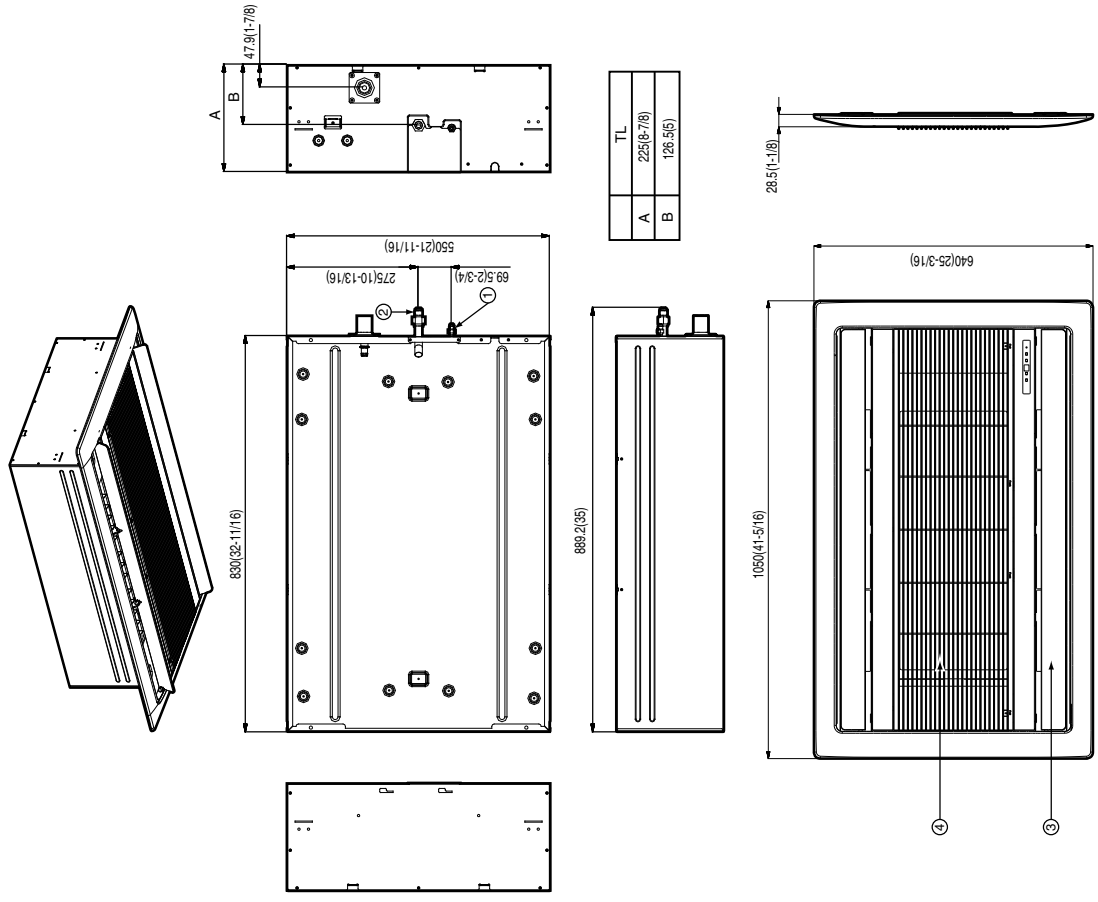

	TL
A	225(8-7/8)
B	126.5(5)

LG Electronics

LG Electronics USA, HVAC Division
1000 Sylvan Avenue, Englewood Cliffs, NJ 07632
www.lgusa.com / www.lghvac.com

76, Seongsan-dong, Changwon City, Gyeongnam,
641-713, Korea
www.lgeaircon.com

CHASSIS CODE: TL

Copyright ©2010 LG Electronics. Inc. All right reserved.
Only for training and service purposes

LGE Internal Use Only

Ceiling Mounted Cassette Type (4Way) (1)

1. Functions 22
2. Operation Details.....23
3. Dimensions 25

Copyright ©2010 LG Electronics. Inc. All right reserved.
Only for training and service purposes

LGE Internal Use Only

1. Functions

Indoor Unit

Operation ON/OFF by Remote controller

Sensing the Room Temperature
- Room temperature sensor. (Thermistor)

Room temperature control
- Maintains the room temperature in accordance with the Setting Temperature.

Starting Current Control
- Indoor fan is delayed for 5 seconds at the starting.

Indoor Fan Speed Control
- Jet, High, Med, Low, Lolow

Soft Dry Operation Mode
- Intermittent operation of fan at low speed.

Airflow Direction Control
- The louver can be set at swing up and down automatically.

Auto Restart
- Although the air-conditioner is turned off by a power failure, it is restarted automatically previous operation mode after power supply.

Deice (defrost) control (Heating)
- Both the indoor and outdoor fan stops during defrosting.
- Hot start after defrost ends.

Hot-start Control (Heating)
- The indoor fan does not rotate until the evaporator piping temperature will be reached at 25°C(76°F).

Compact and light design
- To install a unit is very convenient because of smaller size than textile.

Low noise
- The most advanced low-noise design.
- The adoption of turbo fan and round type heat exchanger give the quietest operation.

Long life filter
- Long life wrinkle(type) and washable and anti-bacteria filter is adopted.

High head Drain pump
- Built-in drain pump automatically drains water.
- A standard drain-head height of up to 700mm (27-9/16inch) is possible.

High-Ceiling corresponding Function
- According to the height of ceiling, the RPM of indoor fan motor is selected to increase air reaching distance.

Central Control(Optional)
- It is operating individually or totally by central control function.

Swirl Swing Control
- It is operating swirl swing

Copyright ©2010 LG Electronics. Inc. All right reserved.
Only for training and service purposes

LGE Internal Use Only

2. Operation Detail

(1) The function of main control

■ Auto Swing Control

• This function is to swing the louver up and down automatically.

■ Soft-Dry Operation

• The indoor fan speed is automatically set to the low, so the shift of the indoor fan speed is impossible because of already being set to the best speed for Dry Operation by microcontroller control.

■ Cooling Mode Operation

• When selecting the Cooling(❄) Mode Operation, the unit will operate according to the setting by the remote controller and the operation diagram is as following

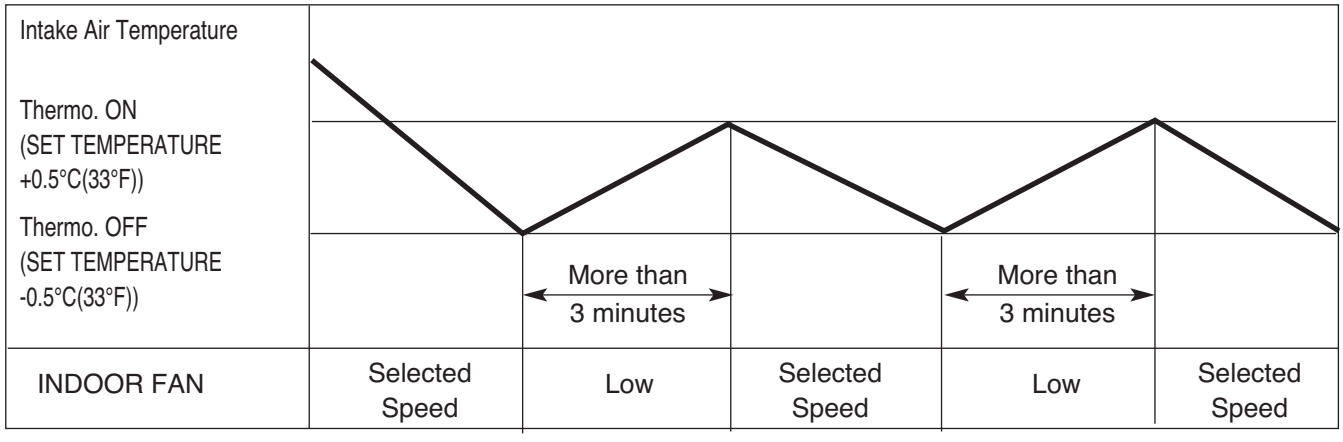

	Thermal ON	Thermal OFF
Indoor Unit mode	ST+0.5	ST-0.5
2TH (Remo.+Indoor)	To be selected higher temperature contrast Indoor Unit and Remo.	To be selected higher temperature contrast Indoor Unit and Remo.
Remo. Mode	ST+0.5	ST-0.5

■ Swirl Swing Control

Vane 2, 4 is almost vane closed while vane1, 3 is opened.

Vane 1, 3 and vane 2,4 turn over minutely

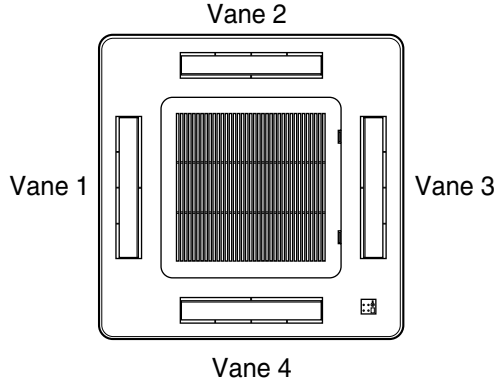

Copyright ©2010 LG Electronics. Inc. All right reserved.
Only for training and service purposes

LGE Internal Use Only

■ Heating Mode Operation

The unit will operate according to the setting by the remote controller and the operation diagram is shown as following.

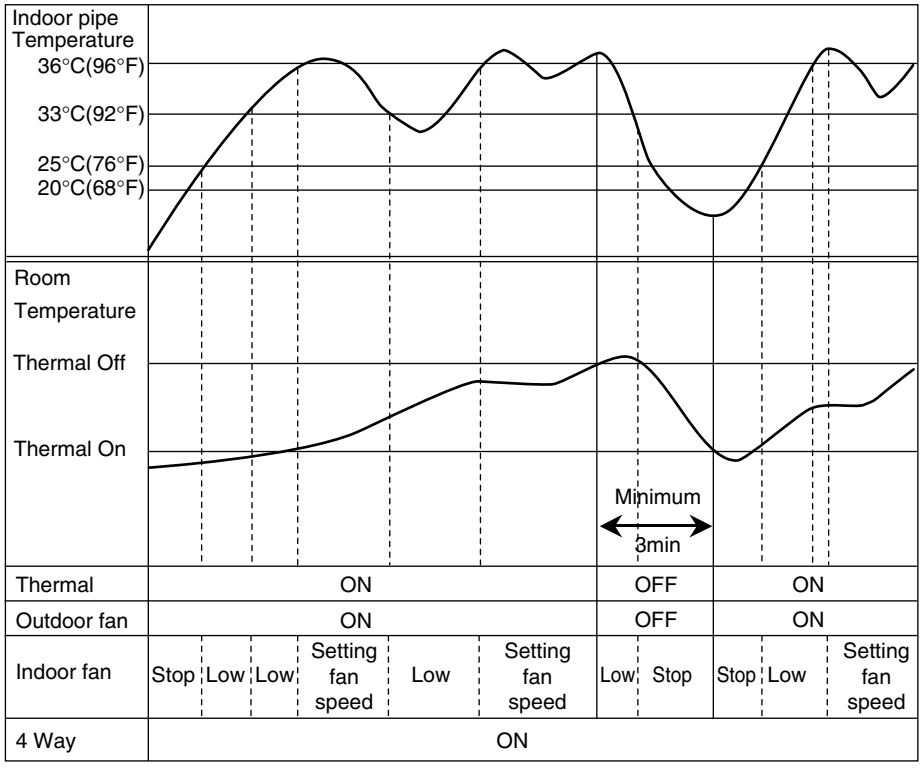

	Thermal ON	Thermal OFF
Indoor Unit mode	ST+2	ST+4
2TH (Remo.+Indoor)	To be selected lower temperature contrast Indoor Unit and Remo.	To be selected lower temperature contrast Indoor Unit and Remo.
Remo. mode	ST+0	ST+2

■ Hot-start Control

- The indoor fan does no rotate until the evaporator piping temperature will be reached to 25°C(76°F).
- The operation diagram is as following.

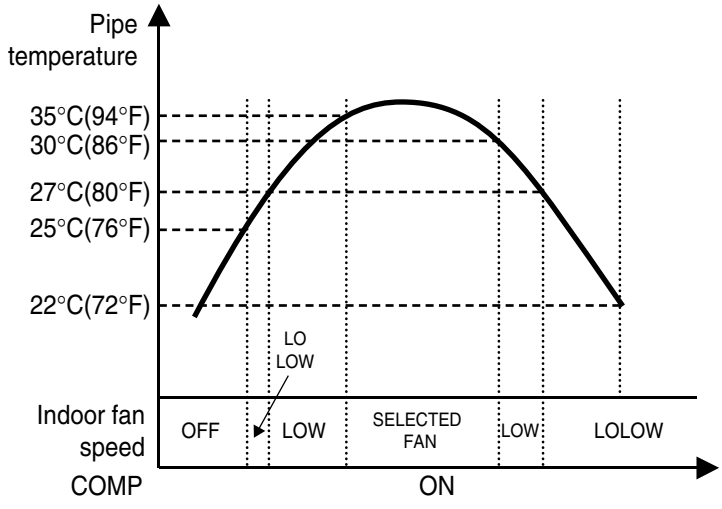

Copyright ©2010 LG Electronics. Inc. All right reserved.
Only for training and service purposes

LGE Internal Use Only

3. Dimensions

Ceiling Cassette 4-way

ARNU05GTR*2
ARNU07GTR*2
ARNU09GTR*2
ARNU12GTR*2

(unit : mm)

Number	Name	Description
1	Liquid pipe connection	Unit size(5k, 7k, 9k, 12k):ø6.35
2	Gas pipe connection	Unit size(5k, 7k, 9k, 12k):ø12.7
3	Drain pipe connection	VP25(Φ32)
4	Power supply connection	
5	Air discharge grill	
6	Air suction grill	

■ Note

1. Unit should be installed in compliance with the installation manual in the product box.
2. Unit shall be grounded in accordance with the local regulations or applicable national codes.

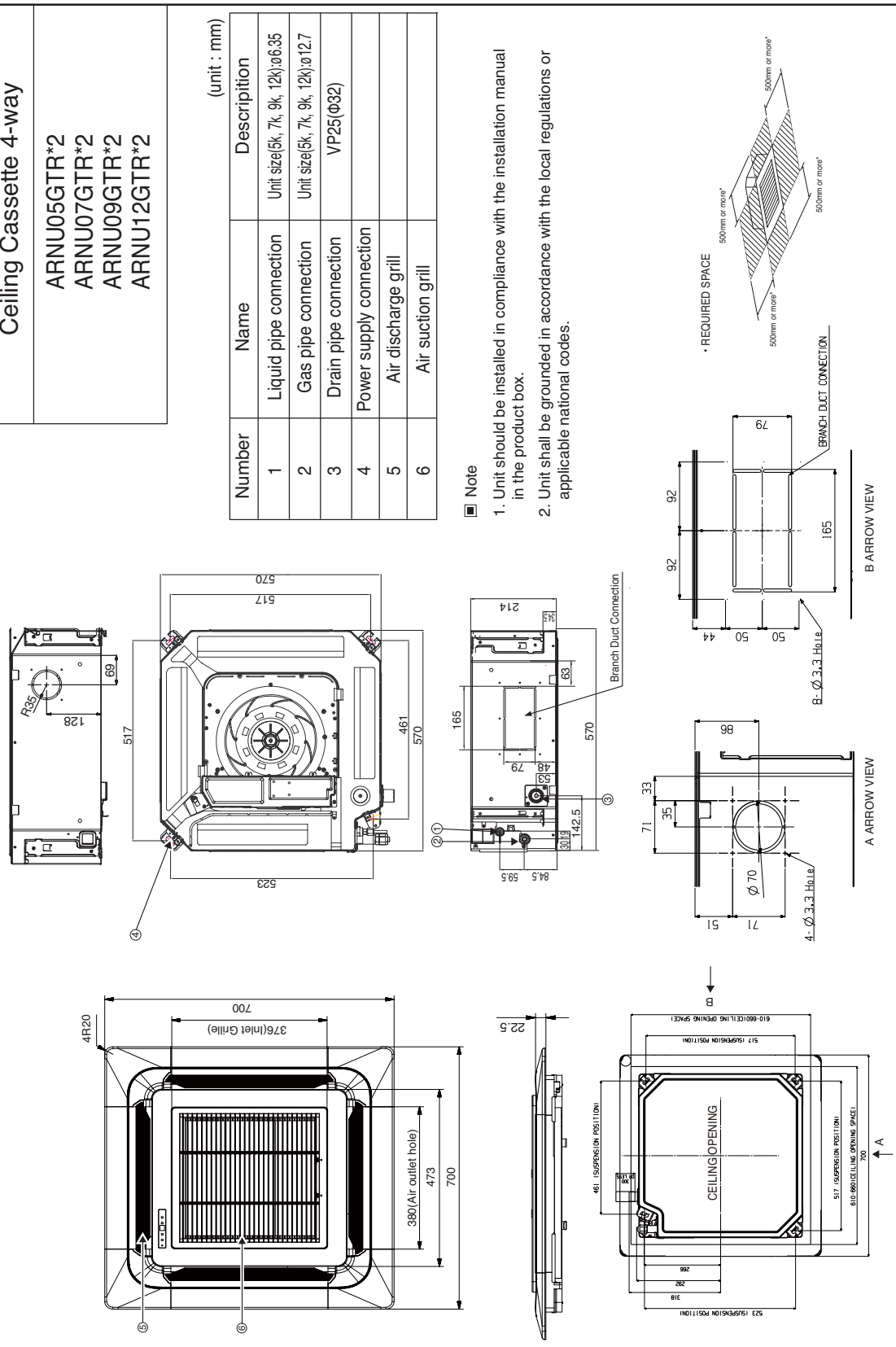

CHASSIS CODE: TR

76, Seongsan-dong, Changwon City, Gyeongnam, 641-713, Korea

LG Electronics

Copyright ©2010 LG Electronics. Inc. All right reserved.
Only for training and service purposes

LGE Internal Use Only

Ceiling Cassette 4-way

ARNU15GTQ*2
ARNU18GTQ*2

(unit : mm)

Number	Name	Description
1	Liquid pipe connection	Unit size(15k, 18k):Ø6.35
2	Gas pipe connection	Unit size(15k, 18k):Ø12.7
3	Drain pipe connection	VP25(Φ32)
4	Power supply connection	
5	Air discharge grill	
6	Air suction grill	

■ Note

1. Unit should be installed in compliance with the installation manual in the product box.
2. Unit shall be grounded in accordance with the local regulations or applicable national codes.

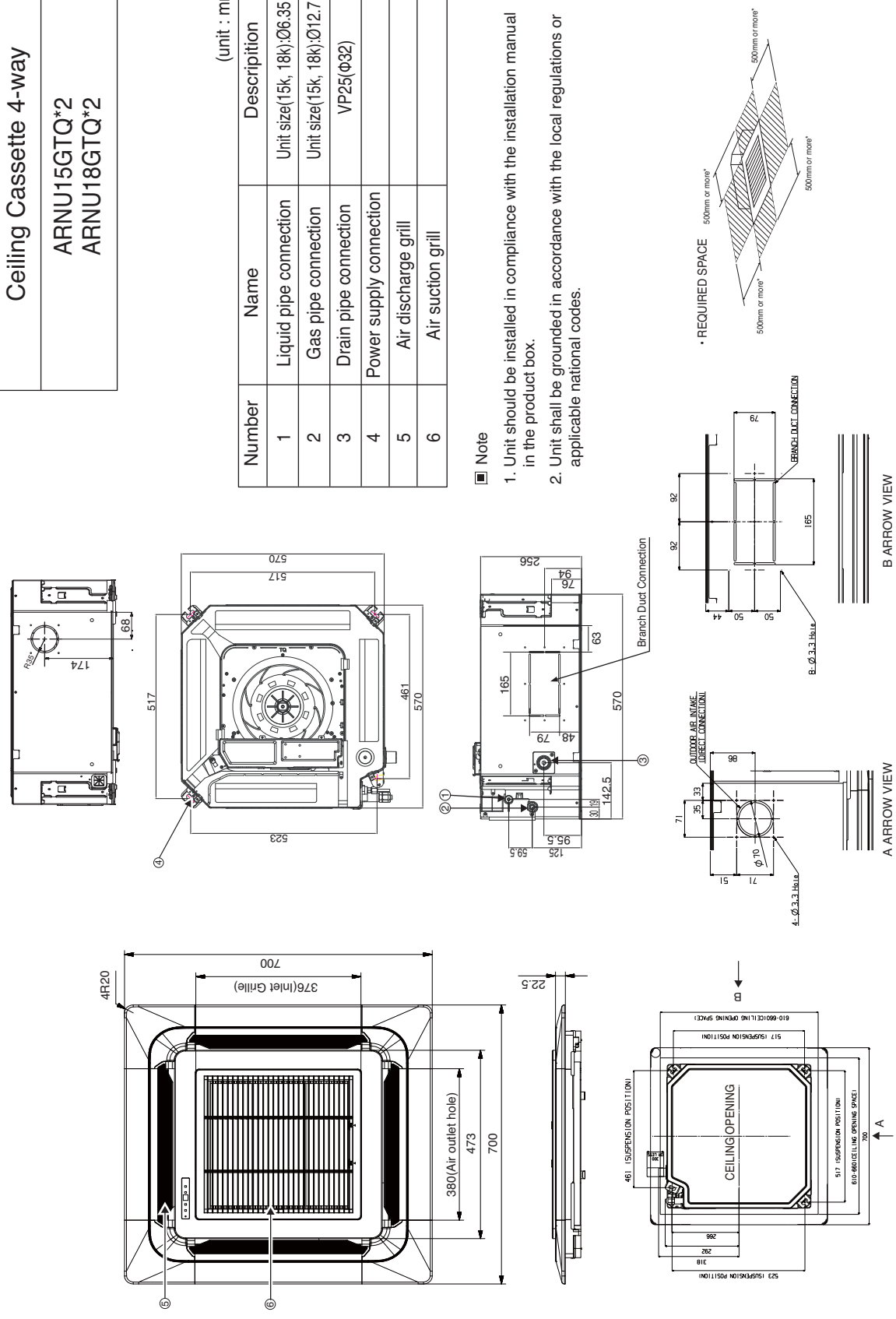

CHASSIS CODE: TQ

76, Seongsan-dong, Changwon City, Gyeongnam, 641-713, Korea

LG Electronics

Copyright ©2010 LG Electronics. Inc. All right reserved.
Only for training and service purposes

LGE Internal Use Only

Ceiling Mounted Cassette Type (4Way) (2)

1. Functions 28
2. Operation Details.....29
3. Dimensions 31

Copyright ©2010 LG Electronics. Inc. All right reserved.
Only for training and service purposes

LGE Internal Use Only

1. Functions

Indoor Unit

Operation ON/OFF by Remote controller

Sensing the Room Temperature
- Room temperature sensor. (Thermistor)

Room temperature control
- Maintains the room temperature in accordance with the Setting Temperature.

Starting Current Control
- Indoor fan is delayed for 5 seconds at the starting.

Indoor Fan Speed Control
- Jet, High, Med, Low, Lolow

Soft Dry Operation Mode
- Intermittent operation of fan at low speed.

Airflow Direction Control
- The louver can be set at swing up and down automatically.

Auto Restart
- Although the air-conditioner is turned off by a power failure, it is restarted automatically previous operation mode after power supply.

Deice (defrost) control (Heating)
- Both the indoor and outdoor fan stops during defrosting.
- Hot start after defrost ends.

Hot-start Control (Heating)
- The indoor fan does not rotate until the evaporator piping temperature will be reached at 25°C(76°F).

Compact and light design
- To install a unit is very convenient because of smaller size than textile.

Low noise
- The most advanced low-noise design.
- The adoption of turbo fan and round type heat exchanger give the quietest operation.

Long life filter
- Long life wrinkle(type) and washable and anti-bacteria filter is adopted.

High head Drain pump
- Built-in drain pump automatically drains water.
- A standard drain-head height of up to 700mm (27-9/16inch) is possible.

High-Ceiling corresponding Function
- According to the height of ceiling, the RPM of indoor fan motor is selected to increase air reaching distance.

Central Control(Optional)
- It is operating individually or totally by central control function.

Swirl Swing Control
- It is operating swirl swing

Copyright ©2010 LG Electronics. Inc. All right reserved.
Only for training and service purposes

LGE Internal Use Only

2. Operation Detail

(1) The function of main control

■ Auto Swing Control

• This function is to swing the louver up and down automatically.

■ Soft-Dry Operation

• The indoor fan speed is automatically set to the low, so the shift of the indoor fan speed is impossible because of already being set to the best speed for Dry Operation by microcontroller control.

■ Cooling Mode Operation

• When selecting the Cooling(❄) Mode Operation, the unit will operate according to the setting by the remote controller and the operation diagram is as following

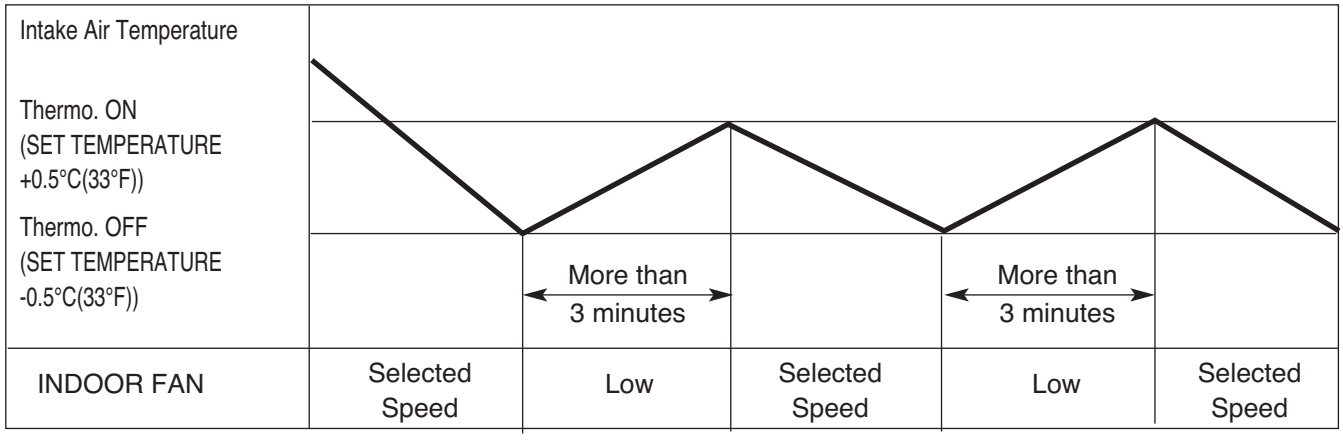

	Thermal ON	Thermal OFF
Indoor Unit mode	ST+0.5	ST-0.5
2TH (Remo.+Indoor)	To be selected higher temperature contrast Indoor Unit and Remo.	To be selected higher temperature contrast Indoor Unit and Remo.
Remo. Mode	ST+0.5	ST-0.5

Copyright ©2010 LG Electronics. Inc. All right reserved.
Only for training and service purposes

LGE Internal Use Only

■ Heating Mode Operation

The unit will operate according to the setting by the remote controller and the operation diagram is shown as following.

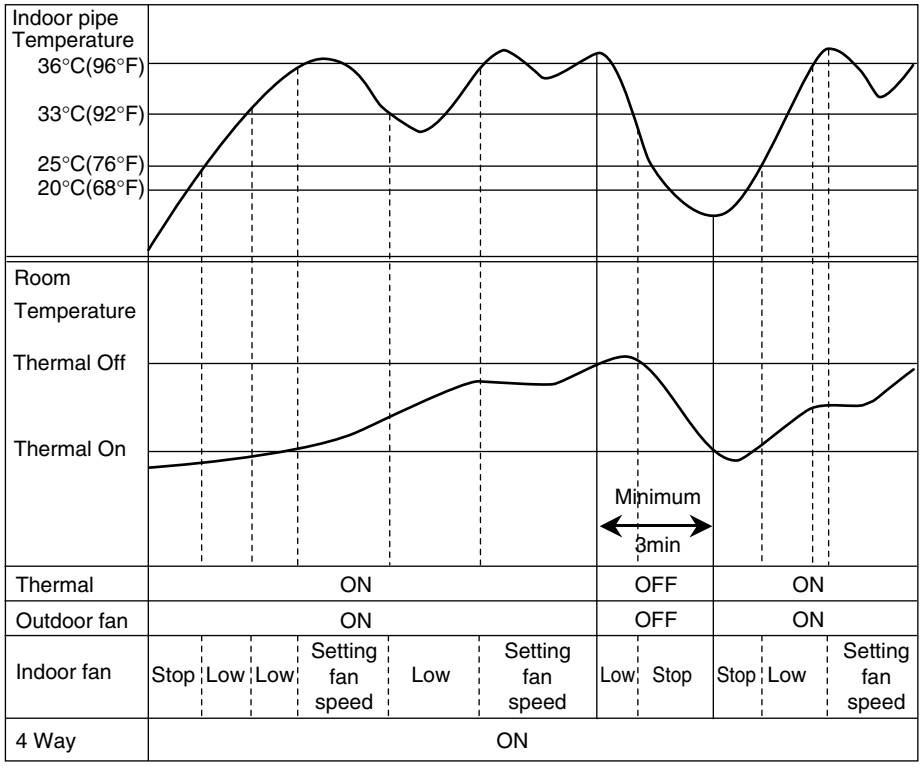

	Thermal ON	Thermal OFF
Indoor Unit mode	ST+2	ST+4
2TH (Remo.+Indoor)	To be selected lower temperature contrast Indoor Unit and Remo.	To be selected lower temperature contrast Indoor Unit and Remo.
Remo. mode	ST+0	ST+2

■ Hot-start Control

- The indoor fan does no rotate until the evaporator piping temperature will be reached to 25°C(76°F).
- The operation diagram is as following.

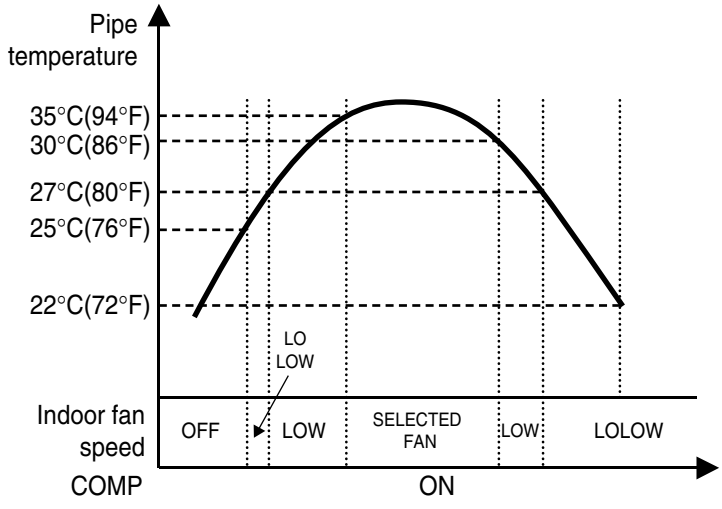

Copyright ©2010 LG Electronics. Inc. All right reserved.
Only for training and service purposes

LGE Internal Use Only

3. Dimensions

Ceiling Cassette 4-way

ARNU21GTP*2
ARNU24GTP*2
ARNU28GTP*2

(unit : mm)

Number	Name	Description
1	Liquid pipe connection	Unit size(24k, 28k):ø9.52
2	Gas pipe connection	Unit size(24k, 28k):ø15.88
3	Drain pipe connection	VP25(Ø32)
4	Power supply connection	
5	Air discharge grill	
6	Air suction grill	

■ Note

1. Unit should be installed in compliance with the installation manual in the product box.
2. Unit shall be grounded in accordance with the local regulations or applicable national codes.

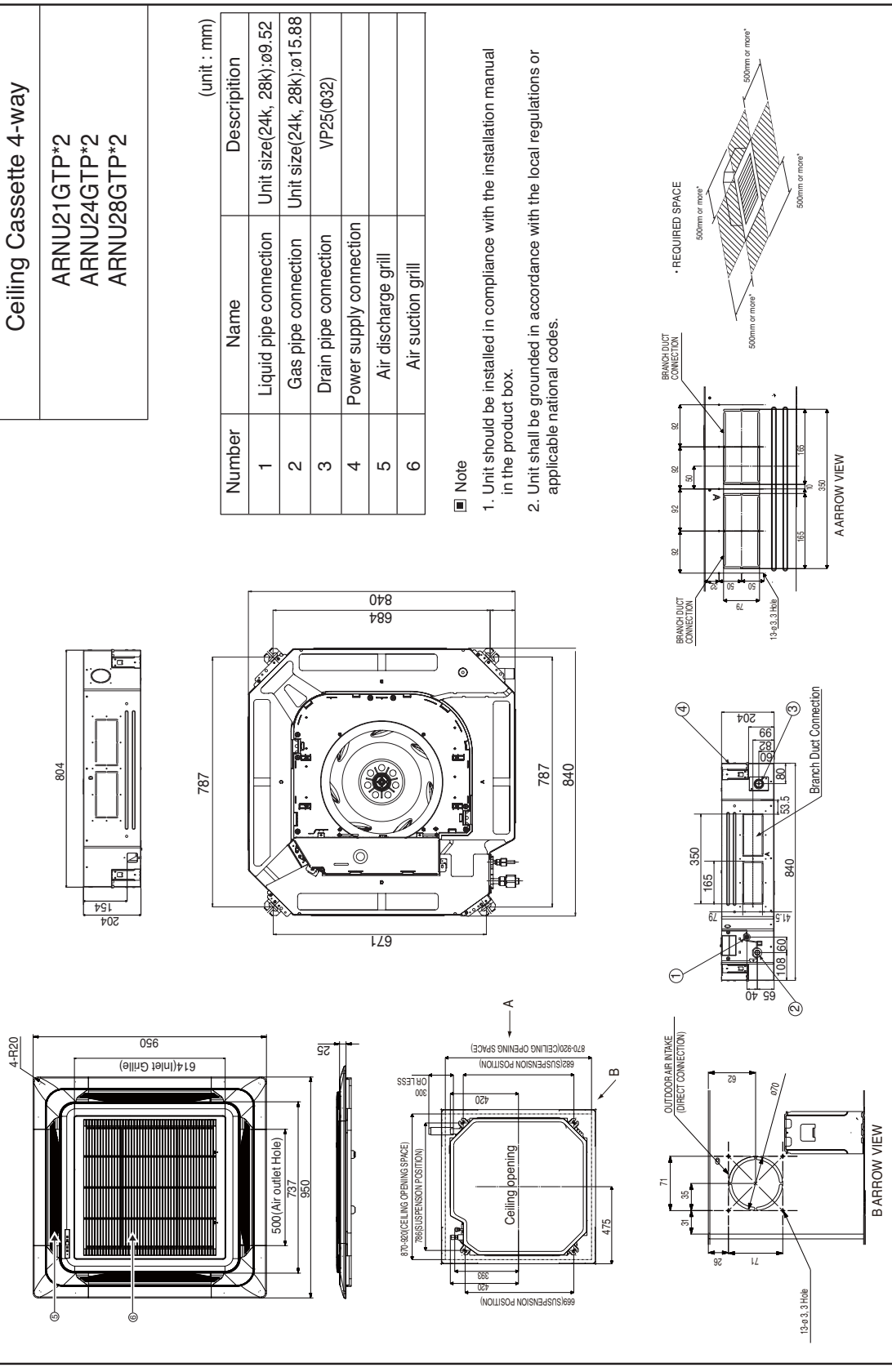

LG Electronics

76, Seongsan-dong, Changwon City, Gyeongnam, 641-713, Korea

CHASSIS CODE: TP

Copyright ©2010 LG Electronics. Inc. All right reserved.
Only for training and service purposes

LGE Internal Use Only

Ceiling Cassette 4-way

ARNU36GTN*2

(unit : mm)

Number	Name	Description
1	Liquid pipe connection	Unit size(36k):ø9.52
2	Gas pipe connection	Unit size(36k):ø15.88
3	Drain pipe connection	VP25(Φ32)
4	Power supply connection	
5	Air discharge grill	
6	Air suction grill	

■ Note

1. Unit should be installed in compliance with the installation manual in the product box.
2. Unit shall be grounded in accordance with the local regulations or applicable national codes.

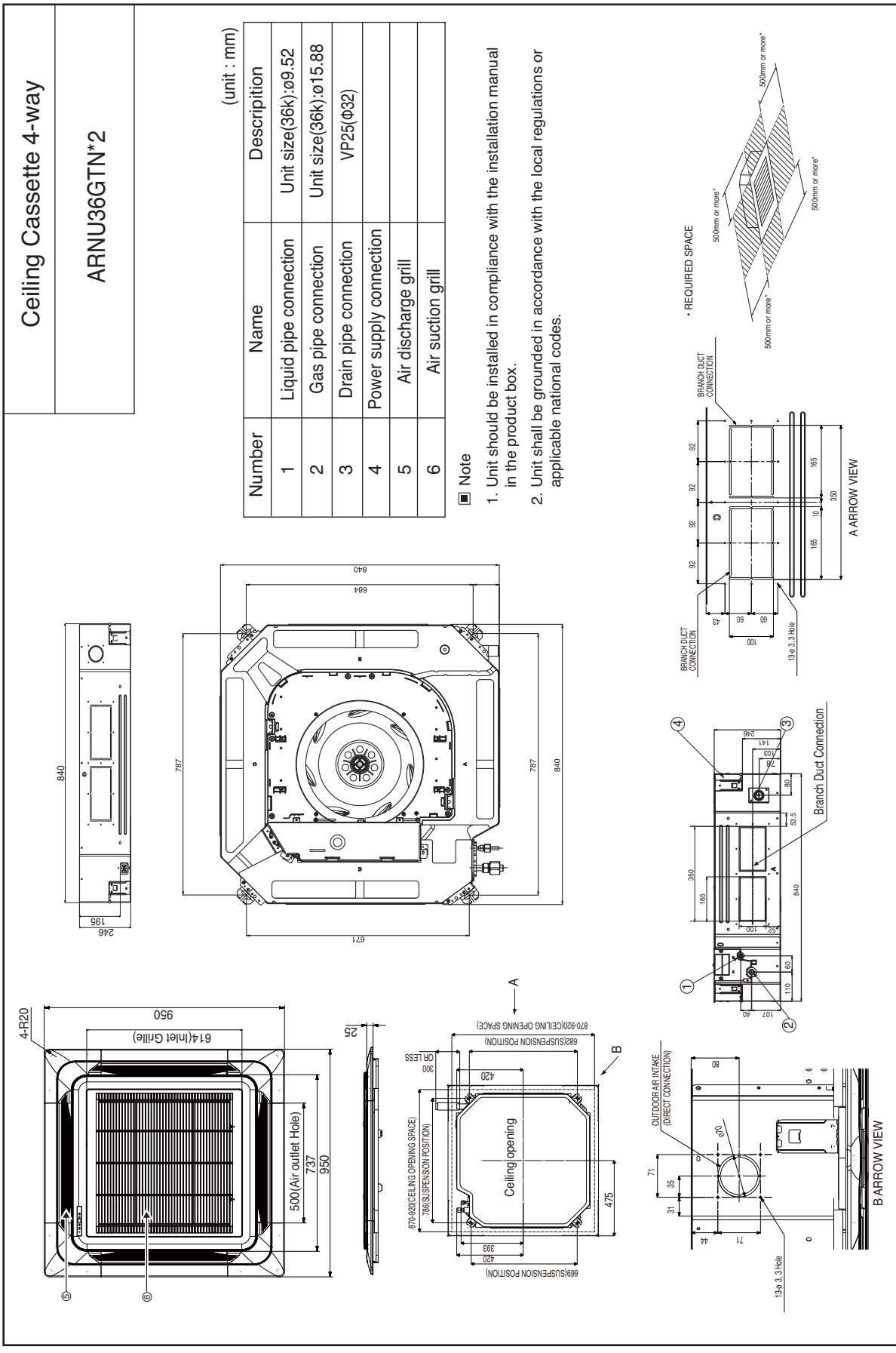

76, Seongsan-dong, Changwon City, Gyeongnam, 641-713, Korea

CHASSIS CODE: TN

LG Electronics

Copyright ©2010 LG Electronics. Inc. All right reserved.
Only for training and service purposes

LGE Internal Use Only

Ceiling Cassette 4-way

ARNU42GTM*2
ARNU48GTM*2

(unit : mm)

Number	Name	Description
1	Liquid pipe connection	Unit size(42k, 48k):ø9.52
2	Gas pipe connection	Unit size(42k, 48k):ø15.88
3	Drain pipe connection	VP25(Φ32)
4	Power supply connection	
5	Air discharge grill	
6	Air suction grill	

■ Note

1. Unit should be installed in compliance with the installation manual in the product box.
2. Unit shall be grounded in accordance with the local regulations or applicable national codes.

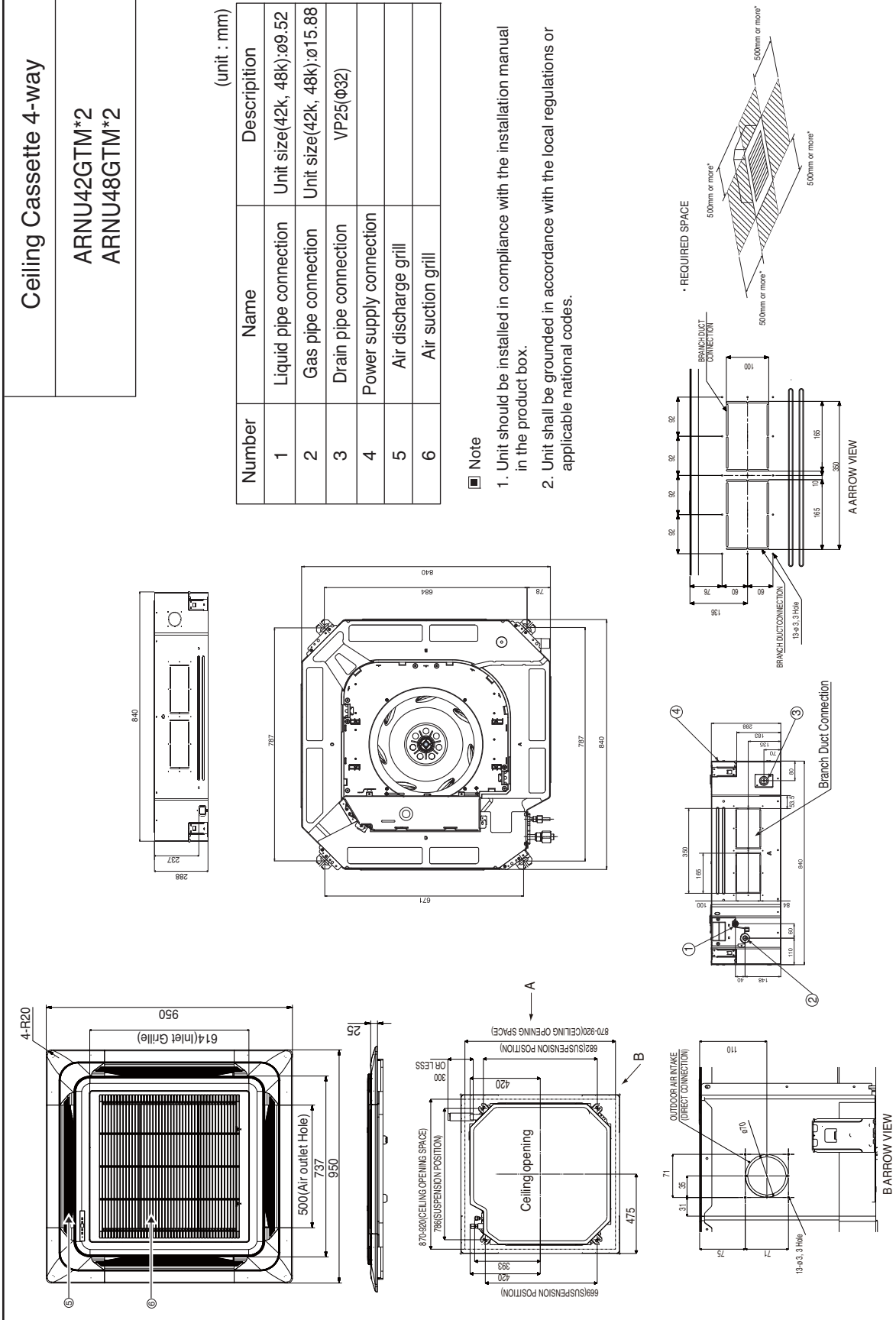

CHASSIS CODE: TM

76, Seongsan-dong, Changwon City, Gyeongnam, 641-713, Korea

LG Electronics

Copyright ©2010 LG Electronics. Inc. All right reserved.
Only for training and service purposes

LGE Internal Use Only

Art Cool Type(Mirror)

1. Functions 35
2. Operation Details.....36
3. Dimensions 43

Copyright ©2010 LG Electronics. Inc. All right reserved.
Only for training and service purposes

LGE Internal Use Only

1. Functions

Indoor Unit

Operation ON/OFF by Remote controller

Sensing the Room Temperature

• Room temperature sensor. (THERMISTOR)

Room temperature control

• Maintains the room temperature in accordance with the Setting Temp.

Starting Current Control

• Indoor fan is delayed for 5 sec at the starting.

Indoor Fan Speed Control

• High, Med, Low, CHAOS

Operation indication Lamps (LED)

Signal Receptor
Receives the signals from the remote control.(Signal receiving sound: two short beeps or one long beep.)
Operation Indication Lamps

	On/Off	: Lights up during the system operation.
	Sleep Mode	: Lights up during Sleep Mode Auto operation.
	Timer	: Lights up during Timer operation.
	Defrost Mode	: Lights up during Defrost Mode or Hot Start operation.

Soft Dry Operation Mode

• Intermittent operation of fan at low speed.

Sleep Mode Auto Control

• The fan is switched to low(Cooling), med(Heating) speed.
• The unit will be stopped after 1, 2, 3, 4, 5, 6, 7 hours.

Natural Air Control by CHAOS Logic

• The fan is switched to intermittent or irregular operation
• The fan speed is automatically switched from high to low speed.

Airflow Direction Control

• The louver can be set at the desired position or swing up and down automatically.

Defrost(Deice) control (Heating)

• Both the indoor and outdoor fan stops during defrosting.

Hot-start Control (Heating)

• The indoor fan does not rotate until the evaporator pipe temperature will be reached at 28°C(82°F).

Copyright ©2010 LG Electronics. Inc. All right reserved.
Only for training and service purposes

LGE Internal Use Only

2. Operation Details

Function of Controls

DISPLAY

1) High quality LCD remote controller supplied

Operation Indicator

• On while in appliance operation, off while in appliance pause

Timer Indicator

• On while in timer mode (on/off) and in sleep timer mode, off when timer mode is completed or canceled

Defrost Indicator

• Off except when hot start during heating mode operation or while in defrost control.

Plasma Indicator

• On while in plasma mode, off while plasma mode is canceled.

Auto restart Indicator

• On while auto restart mode, off while auto restart mode is canceled.

Auto restart

• In case the power comes on again after a power failure, Auto Restarting Operation is the function to operate procedures automatically to the previous operating conditions.
If your want to use this operation, press the Auto Restart Button.

Power(Forced Operation)

• Operation starts, when this button is pressed and stops when you press the button again.

■ Cooling Mode Operation

• When the intake air temperature reaches 0.5°C(33°F) below the setting temp, the compressor and the outdoor fan stop.

• When it reaches 0.5°C(33°F) above the setting temp, they start to operate again.

Compressor ON Temp=> Setting Temp+0.5°C(33°F)

Compressor OFF Temp => Setting Temp-0.5°C(33°F)

• While in compressor running, operating with the airflow speed set by the remote controller. While in compressor not running, operating with the low airflow speed regardless of the setting.

■ Healthy Dehumidification Mode

• When the dehumidification operation input by the remote controller is received, the intake air temperature is detected and the setting temp is automatically set according to the intake air temperature.

26°C(78°F) ≤ Intake Air Temp => 25°C(76°F)

24°C(76°F) ≤ Intake Air Temp < 26°C(78°F) => Intake Air Temp-1°C(34°F)

18°C(64°F) ≤ Intake Air Temp < 24°C(76°F) => Intake Air Temp-0.5°C(33°F)

Intake Air Temp < 18°C(64°F) => 18°C(64°F)

• While in compressor off, the indoor fan repeats low airflow speed and pause.

• While the intake air temp is between compressor on temp. and compressor off temp., 10-min dehumidification operation and 4-min compressor off repeat

Compressor ON Temp. => Setting Temp+0.5°C(33°F)

Compressor OFF Temp. => Setting Temp-0.5°C(33°F)

• In 10-min dehumidification operation, the indoor fan operates with the low airflow speed.

■ Heating Mode Operation

Copyright ©2010 LG Electronics. Inc. All right reserved.
Only for training and service purposes

LGE Internal Use Only

- When the intake air Temp. reaches Compressor OFF Temp., the compressor is turned off.
  When the intake air Temp. reaches Compressor ON Temp., the compressor is turned on.

  Themo ON Temp. => Setting Temp. +2˚C(36°F)

  Themo OFF Temp. => Setting Temp.+4°C(39°F)
- While in compressor on, when above 38°C(100°F), it operates with setting airflow speed (while in sleep mode, with the medium airflow speed).
- While in compressor off, the indoor fan is off when the indoor pipe temp is below 33°C (92°F), when above 35°C(94°F) , it operates with the low airflow speed.
- While in defrost control, both of the indoor and outdoor fans are turned off.

■ Defrost Control

- While in heating mode operation in order to protect outdoor unit from freezing, reversed to cooling cycle to defrost of the outdoor unit.

■ Fuzzy Operation (Outdoor unit C/O Model)

- According to the temperature set by Fuzzy rule, when the intake air temp is 0.5°C(33°F) or more below the setting temp, the compressor is turned off. When 0.5°C(33°F) or more above the setting temp, the compressor is turned on.

  Compressor ON Temp => Setting Temp+0.5°C(33°F)

  Compressor OFF Temp => Setting Temp+0.5°C(33°F)
- At the beginning of Fuzzy mode operation, the setting temperature is automatically selected according to the intake air temp at that time.

  26°C(78°F) ≤ Intake Air Temp => 25°C(76°F)

  24°C(76°F) ≤ Intake Air Temp < 26°C(78°F) => Intake Air Temp+1°C(34°F)

  22°C(72°F) ≤ Intake Air Temp<24°C(76°F) => Intake Air Temp+0.5°C(33°F)

  18°C(64°F) ≤ Intake Air Temp<22°C(72°F) => Intake Air Temp

  Intake Air Temp<18°C(64°F) => 18°C(64°F)
- When the Fuzzy key (Temperature Control key) is input after the initial setting temperature is selected, the Fuzzy key value and the intake air temperature at that time are compared to select the setting temperature automatically according to the Fuzzy rule.
- While in Fuzzy operation, the airflow speed of the indoor fan is automatically selected according to the temperature

■ Fuzzy Operation (Outdoor unit H/P Model)

- When any of operation mode is not selected like the moment of the power on or when 3 hrs has passed since the operation off, the operation mode is selected.
- When determining the operation mode, the compressor, the outdoor fan, and the 4 way valve are off and only the indoor fan is operated for 15 seconds. Then an operation mode is selected according to the intake air temp at that moment as follows.
  24°C(76°F) ≤ Inatake Air Temp => Fuzzy Operation for Cooling

  21°C(70°F)≤ Inatake Air Temp<24°C(76°F) => Fuzzy Operation for Dehumidification

  Inatake Air Temp<21°C(70°F) => Fuzzy Operation for Heating
- If any of the operation modes among cooling / dehumidification / heating mode operations is carried out for 10 sec or longer before Fuzzy operation, the mode before Fuzzy operation is operated.

Copyright ©2010 LG Electronics. Inc. All right reserved.
Only for training and service purposes

LGE Internal Use Only

1) Fuzzy Operation for Cooling

- According to the setting temperature selected by Fuzzy rule, when the intake air temp is 0.5°C(33°F) or more below the setting temp, the compressor is turned off. When 0.5°C(33°F) or more above the setting temp, the compressor is turned on.
  Compressor ON Temp. => Setting Temp+0.5°C(33°F)
  Compressor OFF Temp. => Setting Temp+0.5°C(33°F)
- At the beginning of Fuzzy mode operation, the setting temperature is automatically selected according to the intake air temp at that time.
  26°C(78°F) ≤ Intake Air Temp => 25°C(76°F)
  24°C(76°F) ≤ Intake Air Temp < 26°C(78°F) => Intake Air Temp+1°C(34°F)
  22°C(72°F) ≤ Intake Air Temp<24°C(76°F) => Intake Air Temp+0.5°C(33°F)
  18°C(64°F) ≤ Intake Air Temp<22°C(72°F) => Intake Air Temp
  Intake Air Temp<18°C(64°F) => 18°C(64°F)
- When the Fuzzy key (Temperature Control key) is input after the initial setting temperature is selected, the Fuzzy key value and the intake air temperature at that time are compared to select the setting temperature automatically according to the Fuzzy rule.
- While in Fuzzy operation, the airflow speed of the indoor fan is automatically selected according to the temperature.

2) Fuzzy Operation for Dehumidification

- According to the setting temperature selected by Fuzzy rule, when the intake air temp is 0.5°C(33°F) or more below the setting temp, the compressor is turned off. When 0.5°C(33°F) or more above the setting temp, the compressor is turned on.
  Compressor ON Temp. => Setting Temp+0.5°C(33°F)
  Compressor OFF Temp. => Setting Temp+0.5°C(33°F)

- At the beginning of Fuzzy mode operation, the setting temperature is automatically selected according to the intake air temp at that time.
  26°C(78°F) ≤ Intake Air Temp => 25°C(76°F)
  24°C(76°F) ≤ Intake Air Temp < 26°C(78°F)=> Intake Air Temp+1°C(34°F)
  22°C(72°F) ≤ Intake Air Temp<24°C(76°F) => Intake Air Temp+0.5°C(33°F)
  18°C(64°F) ≤ Intake Air Temp<22°C(72°F) => Intake Air Temp
  Intake Air Temp < 18°C(64°F) => 18°C(64°F)
- When the Fuzzy key (Temperature Control key) is input after the initial setting temperature is selected, the Fuzzy key value and the intake air temperature at that time are compared to select the setting temperature automatically according to the Fuzzy rule.
- While in Fuzzy operation, the airflow speed of the indoor fan repeats the low airflow speed or pause as in dehumidification operation.

Copyright ©2010 LG Electronics. Inc. All right reserved.
Only for training and service purposes

LGE Internal Use Only

3) Fuzzy Operation for Heating

- According to the setting temperature selected by Fuzzy rule, when the intake air temp is 3°C(37°F) or more above the setting temp, the compressor is turned off. When below the setting temp, the compressor is turned on.

  Compressor ON Temp => Setting Temp + 2°C(36°F)
  Compressor OFF Temp => Setting Temp + 4°C(39°F)
- At the beginning of Fuzzy mode operation, the setting temperature is automatically selected according to the intake air temp at that time.
  20°C(68°F) ≤ Intake Air Temp => Intake Air Temp + 0.5°C(33°F)
  Intake Air Temp < 20°C(68°F) => 20°C(68°F)

- When the Fuzzy key (Temperature Control key) is input after the initial setting temperature is selected, the Fuzzy key value and the intake air temperature at that time are compared to select the setting temperature automatically according to the Fuzzy rule.
- While in Fuzzy operation, the airflow speed of the indoor fan is set to the high or the medium according to the intake air temperature and the setting temperature.

■ Airflow Speed Selection

- The airflow speed of the indoor fan is set to high, medium, low, or chaos by the input of the airflow speed selection key on the remote controller.

■ On-Timer Operation

- When the set time is reached after the time is input by the remote controller, the appliance starts to operate.
- The timer LED is on when the on-timer is input. It is off when the time set by the timer is reached.
- If the appliance is operating at the time set by the timer, the operation continues.

■ Off-Timer Operation

- When the set time is reached after the time is input by the remote controller, the appliance stops operating.
- The timer LED is on when the off-timer is input. It is off when the time set by the timer is reached.
- If the appliance is on pause at the time set by the timer, the pause continues.

Copyright ©2010 LG Electronics. Inc. All right reserved.
Only for training and service purposes

LGE Internal Use Only

■ Off-Timer <=> On-Timer Operation

- When the set time is reached after the on/off time is input by the remote controller, the on/off-timer operation is carried out according to the set time.

■ Sleep Timer Operation

- When the sleep time is reached after <1,2,3,4,5,6,7,0(cancel) hr> is input by the remote controller while in appliance operation, the operation of the appliance stops.
- While the appliance is on pause, the sleep timer mode cannot be input.
- While in cooling mode operation, 30 min later since the start of the sleep timer, the setting temperature increases by 1°C(34°F) After another 30 min elapse, it increases by 1°C(34°) again.
- When the sleep timer mode is input while in cooling cycle mode, the airflow speed of the indoor fan is set to the low.
- When the sleep timer mode is input while in heating cycle mode, the airflow speed of the indoor fan is set to the medium.

■ Chaos Swing Mode

- By the Chaos Swing key input, the vane automatically operates with the Chaos Swing or they are fixed to the desired direction.

■ Chaos Natural Wind Mode

- When the Chaos Natural Wind mode is selected and then operated, the high, medium, or low speed of the air-flow mode is operated for 2~15 sec randomly by the Chaos Simulation."

■ Jet Cool Mode Operation (Outdoor unit C/O Model)

- If the Jet Cool key is input at any operation mode while in appliance operation, the Jet Cool mode operates.
- In the Jet Cool mode, the indoor fan is operated at super-high speed for 30 min at cooling mode operation.
- In the Jet Cool mode operation, the room temperature is controlled to the setting temperature, 18°C(64°F).
- When the sleep timer mode is input while in the Jet Cool mode operation, the Jet Cool mode has the priority.
- When the Jet Cool key is input, the upper/lower vanes are reset to those of the initial cooling mode and then operated in order that the air outflow could reach further.

■ Jet Cool Mode Operation (Outdoor unit H/P Model)

- While in heating mode or Fuzzy operation, the Jet Cool key cannot be input. When it is input while in the other mode operation (cooling, dehumidification, ventilation), the Jet Cool mode is operated."
- In the Jet Cool mode, the indoor fan is operated at super-high speed for 30 min at cooling mode operation.
- In the Jet Cool mode operation, the room temperature is controlled to the setting temperature, 18°C(64°F).
- When the sleep timer mode is input while in the Jet Cool mode operation, the Jet Cool mode has the priority.
- When the Jet Cool key is input, the upper/lower vanes are reset to those of the initial cooling mode and then operated in order that the air outflow could reach further.

■ Auto Restarting Operation

- When the power is restored after a sudden power failure while in appliance operation, the mode before the power failure is kept on the memory and the appliance automatically operates in the mode on the memory.
- Operation Mode that is kept on the memory

Copyright ©2010 LG Electronics. Inc. All right reserved.
Only for training and service purposes

LGE Internal Use Only

- State of Operation ON/OFF
- Operation Mode/Setting Temp/Selected Airflow Speed
- Sleep Timer Mode/Remaining Time of Sleep Timer (unit of hour)

■ Forced Operation (Outdoor unit C/O Model)

- To operate the appliance by force in case that the remote controller is lost, the forced operation button is on the main unit of the appliance to operate the appliance in the standard conditions.
- Press the forced operation button, the forced operation is carried out.
- Press the forced operation button once again to stop operation.
- The forced operation is carried out in cooling mode with the setting temperature 22°C(72°F) and the high speed of airflow.

■ Forced Operation (Outdoor unit H/P Model)

- To operate the appliance by force in case that the remote controller is lost, the forced operation selection switch is on the main unit of the appliance to operate the appliance in the standard conditions.
- Press the forced operation button, the forced operation is carried out.
- Press the forced operation button once again to stop operation.
- In the forced operation mode, the indoor fan is operated at low speed for around 15 sec and then the operation condition is set according to the intake air temperature as follows.

  24°C(76°F) ≤ Intake Air Temp => Cooling Mode Operation, 22°C(72°F), High Speed

  21°C(70°F) ≤ Intake Air Temp < 24°C(76°F) => Dehumidification Operation, 23°C(74°F), High Speed

  Intake Air Temp < 21°C(70°F) => Heating Mode Operation, 24°C(76°F), High Speed

■ Test Operation Control

- To check the condition of the installation when installing the appliance, the appliance is operated at cooling mode, high speed of airflow, compressor-on for 18 min without controlling the room temperature.
- After supplying power to the main body, keep pressing the forced operation button for about 3 seconds.
- While in test operation, a key can be input by the remote controller.
  When a key (operation start/stop, operation mode selection, airflow speed selection, temperature control, Jet Cool) is input by the remote controller, the test operation is canceled and the appliance is operated according to the setting by the remote controller.

■ Protection of the evaporator pipe from frosting

- In the temperrature of the indoor pipe is below 0°C(32°F) after 7 minutes from starting the compressor, the compressor and outdoor fan are stopped, and 3 minutes delay of operating of the compressor, when the temperature of the indoor pipe is over 7°C(45°F), the compressor and the outdoor fan are reoperated.
- Outdoor fan motor stops when indoor pipe temperature is blow 3°C(37°F) and restarts at the pipe temperature above 6°C(43°F) or after 90 seconds, if the pipe temperature does not rise to 6°C(43°F), outdoor fan motor runs continuously at even below 3°C(37°F).

Copyright ©2010 LG Electronics. Inc. All right reserved.
Only for training and service purposes

LGE Internal Use Only

■ Buzzer Sounding Operation

- When the appliance-operation key is input by the remote controller, the short “beep-beep-” sounds.
- When the appliance-pause key is input by the remote controller, the long “beep—” sounds.

■ Air Cleaner Operation

- When an air cleaner function is selected during Air Conditioner operation
  - Plasma air cleaner function will be operated while in any operation mode with selecting the function.
  - The function is to be stopped while it is operating with selecting the function.
- When an air cleaner function is selected during operation off
  - The function will be only operated.
- When inlet grille of air conditioner is opened during plasma operation, High Voltage Generator(H.V.B) is to be stopped. When inlet grille of air conditioner is closed during plasma operation, High Voltage Generator(H.V.B) will be operated again.

Copyright ©2010 LG Electronics. Inc. All right reserved.
Only for training and service purposes

LGE Internal Use Only

3. Dimensions

ART COOL Mirror

ARNU073SE*2
ARNU093SE*2
ARNU123SE*2
ARNU153SE*2

[Unit : mm(inch)]

Model	W	H	D
ARNU073SE*2 ARNU093SE*2 ARNU123SE*2 ARNU153SE*2	915 (36)	282 (11-1/8)	169 (5-5/8)

[Unit : mm(inch)]

Number	Name	Description
1	Air discharge grill	
2	Air suction grill	

▣ Note

1. Unit should be installed in compliance with the installation manual in the product box.
2. Unit shall be grounded in accordance with the local regulations or applicable national codes.

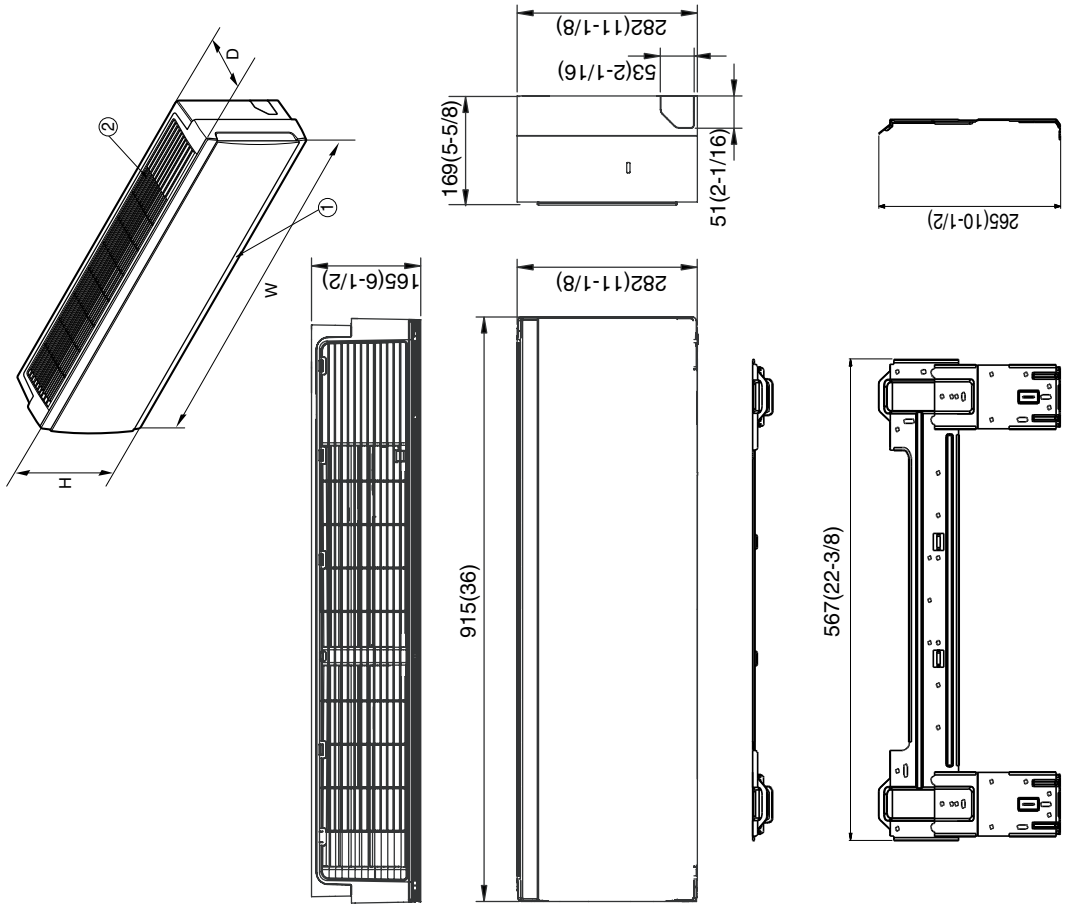

LG Electronics

LG Electronics USA, HVAC Division
1000 Sylvan Avenue, Englewood Cliffs, NJ 07632
www.lgusa.com / www.lghvac.com

76, Seongsan-dong, Changwon City, Gyeongnam,
641-713, Korea
www.lgeaircon.com

CHASSIS CODE: SE

Copyright ©2010 LG Electronics. Inc. All right reserved.
Only for training and service purposes

LGE Internal Use Only

ART COOL Mirror

ARNU18GS8*2
ARNU24GS8*2

(unit : mm)

No.	Part Name	Remark
1	Front panel	
2	Display & signal receiver	
3	Air suction grille	
4	Knockout hole	
5	Installation plate	

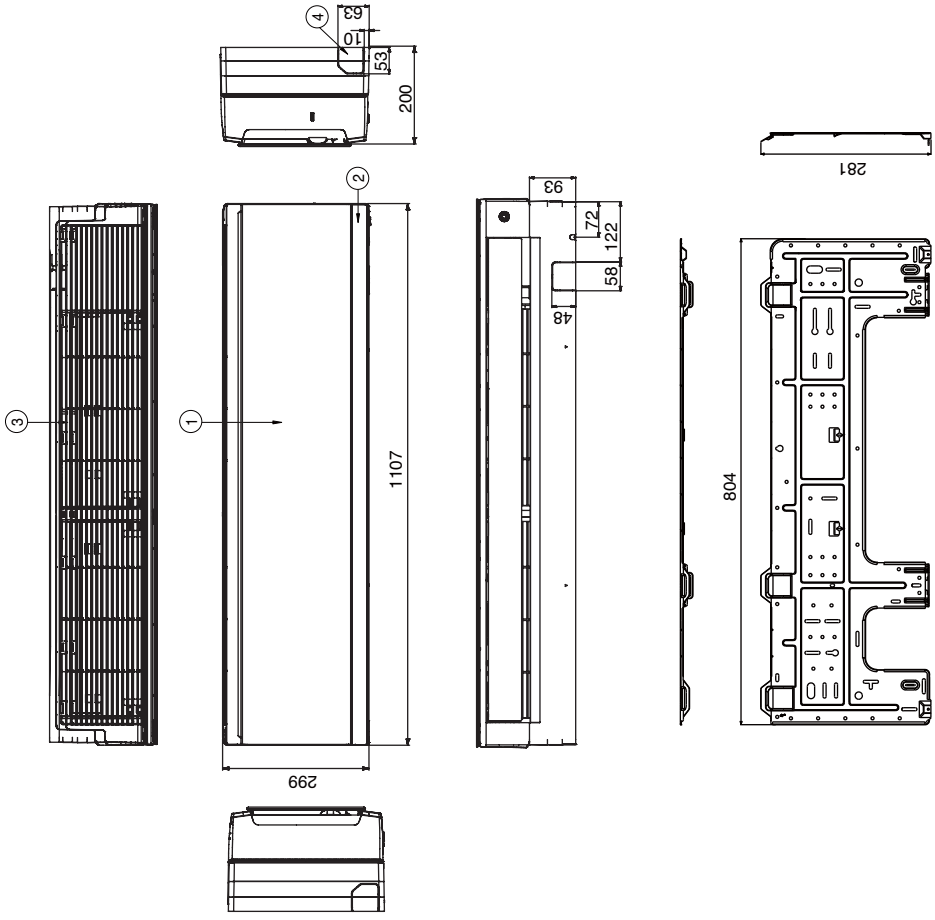

▣ Note

1. Unit should be installed in compliance with the installation manual in the product box.
2. Unit shall be grounded in accordance with the local regulations or applicable national codes.

76, Seongsan-dong, Changwon City, Gyeongnam, 641-713, Korea

LG Electronics

CHASSIS CODE: S8

Copyright ©2010 LG Electronics. Inc. All right reserved.
Only for training and service purposes

LGE Internal Use Only

ArtCoolGallery

1. Functions 46
2. Operation Details.....47
3. Dimensions 54

Copyright ©2010 LG Electronics. Inc. All right reserved.
Only for training and service purposes

LGE Internal Use Only

1. Functions

Indoor Unit

Operation ON/OFF by Remote controller

Sensing the Room Temperature

• Room temperature sensor. (THERMISTOR)

Room temperature control

• Maintains the room temperature in accordance with the Setting Temp.

Starting Current Control

• Indoor fan is delayed for 5 sec at the starting.

Indoor Fan Speed Control

• High, Med, Low, CHAOS

Operation indication Lamps (LED)

Signal Receptor
Receives the signals from the remote control.(Signal receiving sound: two short beeps or one long beep.)
Operation Indication Lamps

	On/Off	: Lights up during the system operation.
	Sleep Mode	: Lights up during Sleep Mode Auto operation.
	Timer	: Lights up during Timer operation.
	Defrost Mode	: Lights up during Defrost Mode or Hot Start operation.

Soft Dry Operation Mode

• Intermittent operation of fan at low speed.

Sleep Mode Auto Control

• The fan is switched to low(Cooling), med(Heating) speed.
• The unit will be stopped after 1, 2, 3, 4, 5, 6, 7 hours.

Natural Air Control by CHAOS Logic

• The fan is switched to intermittent or irregular operation
• The fan speed is automatically switched from high to low speed.

Airflow Direction Control

• The louver can be set at the desired position or swing up and down automatically.

Defrost(Deice) control (Heating)

• Both the indoor and outdoor fan stops during defrosting.

Hot-start Control (Heating)

• The indoor fan does not rotate until the evaporator pipe temperature will be reached at 28°C(82°F).

Copyright ©2010 LG Electronics. Inc. All right reserved.
Only for training and service purposes

LGE Internal Use Only

2. Operation Details

Function of Controls

DISPLAY

1) High quality LCD remote controller supplied

Operation Indicator

• On while in appliance operation, off while in appliance pause

Timer Indicator

• On while in timer mode (on/off) and in sleep timer mode, off when timer mode is completed or canceled

Defrost Indicator

• Off except when hot start during heating mode operation or while in defrost control.

Plasma Indicator

• On while in plasma mode, off while plasma mode is canceled.

Auto restart Indicator

• On while auto restart mode, off while auto restart mode is canceled.

Auto restart

• In case the power comes on again after a power failure, Auto Restarting Operation is the function to operate procedures automatically to the previous operating conditions.
If your want to use this operation, press the Auto Restart Button.

Power(Forced Operation)

• Operation starts, when this button is pressed and stops when you press the button again.

■ Cooling Mode Operation

• When the intake air temperature reaches 0.5°C(33°F) below the setting temp, the compressor and the outdoor fan stop.

• When it reaches 0.5°C(33°F) above the setting temp, they start to operate again.

Compressor ON Temp=> Setting Temp+0.5°C(33°F)

Compressor OFF Temp => Setting Temp-0.5°C(33°F)

• While in compressor running, operating with the airflow speed set by the remote controller. While in compressor not running, operating with the low airflow speed regardless of the setting.

Copyright ©2010 LG Electronics. Inc. All right reserved.
Only for training and service purposes

LGE Internal Use Only

■ Healthy Dehumidification Mode

- When the dehumidification operation input by the remote controller is received, the intake air temperature is detected and the setting temp is automatically set according to the intake air temperature.

  26°C(78°F) ≤ Intake Air Temp => 25°C

  24°C(76°F) ≤ Intake Air Temp < 26°C(78°F) => Intake Air Temp-1°C

  18°C(64°F) ≤ Intake Air Temp < 24°C(76°F) => Intake Air Temp-0.5°C(33°F)

  Intake Air Temp < 18°C(64°F) => 18°C(64°F)
- While in compressor off, the indoor fan repeats low airflow speed and pause.
- While the intake air temp is between compressor on temp. and compressor off temp., 10-min dehumidification operation and 4-min compressor off repeat

  Compressor ON Temp. => Setting Temp+0.5°C(33°F)

  Compressor OFF Temp. => Setting Temp-0.5°C(33°F)
- In 10-min dehumidification operation, the indoor fan operates with the low airflow speed.

■ Heating Mode Operation

- When the intake air Temp. reaches Compressor OFF Temp., the compressor is turned off.
  When the intake air Temp. reaches Compressor ON Temp., the compressor is turned on.

  Themo ON Temp. => Setting Temp. +2˚C(36°F)

  Themo OFF Temp. => Setting Temp.+4°C(39°F)
- While in compressor on, when above 38°C(100°F), it operates with setting airflow speed (while in sleep mode, with the medium airflow speed).
- While in compressor off, the indoor fan is off when the indoor pipe temp is below 33°C(92°F) , when above 35°C(94°F) , it operates with the low airflow speed.
- While in defrost control, both of the indoor and outdoor fans are turned off.

■ Defrost Control

- While in heating mode operation in order to protect outdoor unit from freezing, reversed to cooling cycle to defrost of the outdoor unit.

■ Fuzzy Operation (Outdoor unit C/O Model)

- According to the temperature set by Fuzzy rule, when the intake air temp is 0.5°C(33°F) or more below the setting temp, the compressor is turned off. When 0.5°C(33°F) or more above the setting temp, the compressor is turned on.

  Compressor ON Temp => Setting Temp+0.5°C(33°F)

  Compressor OFF Temp => Setting Temp+0.5°C(33°F)
- At the beginning of Fuzzy mode operation, the setting temperature is automatically selected according to the intake air temp at that time.

  26°C(78°F) ≤ Intake Air Temp => 25°C(76°F)

  24°C(76°F) ≤ Intake Air Temp<26°C(78°F) => Intake Air Temp+1°C(34°F)

  22°C(72°F) ≤ Intake Air Temp<24°C(76°F) => Intake Air Temp+0.5°C(33°F)

  18°C(64°F) ≤ Intake Air Temp<22°C(72°F) => Intake Air Temp

  Intake Air Temp<18°C(64°F) => 18°C(64°F)
- When the Fuzzy key (Temperature Control key) is input after the initial setting temperature is selected, the Fuzzy key value and the intake air temperature at that time are compared to select the setting temperature automatically according to the Fuzzy rule.
- While in Fuzzy operation, the airflow speed of the indoor fan is automatically selected according to the temper-

Copyright ©2010 LG Electronics. Inc. All right reserved.
Only for training and service purposes

LGE Internal Use Only

ature

■ Fuzzy Operation (Outdoor unit H/P Model)

- When any of operation mode is not selected like the moment of the power on or when 3 hrs has passed since the operation off, the operation mode is selected.
- When determining the operation mode, the compressor, the outdoor fan, and the 4 way valve are off and only the indoor fan is operated for 15 seconds. Then an operation mode is selected according to the intake air temp at that moment as follows.

  24°C(76°F) ≤ Inatake Air Temp => Fuzzy Operation for Cooling

  21°C(70°F) ≤ Inatake Air Temp<24°C(76°F) => Fuzzy Operation for Dehumidification

  Inatake Air Temp<21°C(70°F) => Fuzzy Operation for Heating
- If any of the operation modes among cooling / dehumidification / heating mode operations is carried out for 10 sec or longer before Fuzzy operation, the mode before Fuzzy operation is operated.

1) Fuzzy Operation for Cooling

- According to the setting temperature selected by Fuzzy rule, when the intake air temp is 0.5°C(33°F) or more below the setting temp, the compressor is turned off. When 0.5°C(33°F) or more above the setting temp, the compressor is turned on.

  Compressor ON Temp => Setting Temp+0.5°C(33°F)

  Compressor OFF Temp => Setting Temp+0.5°C(33°F)
- At the beginning of Fuzzy mode operation, the setting temperature is automatically selected according to the intake air temp at that time.

  26°C(78°F) ≤ Intake Air Temp => 25°C(76°F)

  24°C(76°F) ≤ Intake Air Temp<26°C(78°F) => Intake Air Temp+1°C(34°F)

  22°C(72°F) ≤ Intake Air Temp<24°C(76°F) => Intake Air Temp+0.5°C(33°F)

  18°C(64°F) ≤ Intake Air Temp<22°C(72°F) => Intake Air Temp

  Intake Air Temp < 18°C(64°F) => 18°C(64°F)
- When the Fuzzy key (Temperature Control key) is input after the initial setting temperature is selected, the Fuzzy key value and the intake air temperature at that time are compared to select the setting temperature automatically according to the Fuzzy rule.
- While in Fuzzy operation, the airflow speed of the indoor fan is automatically selected according to the temperature.

2) Fuzzy Operation for Dehumidification

- According to the setting temperature selected by Fuzzy rule, when the intake air temp is 0.5°C or more below the setting temp, the compressor is turned off. When 0.5°C(33°F) or more above the setting temp, the compressor is turned on.

  Compressor ON Temp => Setting Temp+0.5°C(33°F)

  Compressor OFF Temp => Setting Temp+0.5°C(33°F)

Copyright ©2010 LG Electronics. Inc. All right reserved.
Only for training and service purposes

LGE Internal Use Only

- At the beginning of Fuzzy mode operation, the setting temperature is automatically selected according to the intake air temp at that time.

  26°C(78°F) ≤ Intake Air Temp => 25°C(76°F)

  24°C(76°F) ≤ Intake Air Temp<26°C(78°F) => Intake Air Temp+1°C(34°F)

  22°C(72°F) ≤ Intake Air Temp<24°C(76°F) => Intake Air Temp+0.5°C(33°F)

  18°C(64°F) ≤ Intake Air Temp<22°C(72°F) => Intake Air Temp

  Intake Air Temp < 18°C (64°F) => 18°C(64°F)
- When the Fuzzy key (Temperature Control key) is input after the initial setting temperature is selected, the Fuzzy key value and the intake air temperature at that time are compared to select the setting temperature automatically according to the Fuzzy rule.
- While in Fuzzy operation, the airflow speed of the indoor fan repeats the low airflow speed or pause as in dehumidification operation.

3) Fuzzy Operation for Heating

- According to the setting temperature selected by Fuzzy rule, when the intake air temp is 3°C(37°F) or more above the setting temp, the compressor is turned off. When below the setting temp, the compressor is turned on.

  Compressor ON Temp => Setting Temp + 2°C(36°F)
  Compressor OFF Temp => Setting Temp + 4°C(39°F)
- At the beginning of Fuzzy mode operation, the setting temperature is automatically selected according to the intake air temp at that time.
  20°C(68°F) ≤ Intake Air Temp => Intake Air Temp + 0.5°C(33°F)
  Intake Air Temp < 20°C(68°F) => 20°C(68°F)

- When the Fuzzy key (Temperature Control key) is input after the initial setting temperature is selected, the Fuzzy key value and the intake air temperature at that time are compared to select the setting temperature automatically according to the Fuzzy rule.
- While in Fuzzy operation, the airflow speed of the indoor fan is set to the high or the medium according to the intake air temperature and the setting temperature.

■ Airflow Speed Selection

- The airflow speed of the indoor fan is set to high, medium, low, or chaos by the input of the airflow speed selection key on the remote controller.

■ On-Timer Operation

- When the set time is reached after the time is input by the remote controller, the appliance starts to operate.
- The timer LED is on when the on-timer is input. It is off when the time set by the timer is reached.
- If the appliance is operating at the time set by the timer, the operation continues.

■ Off-Timer Operation

- When the set time is reached after the time is input by the remote controller, the appliance stops operating.
- The timer LED is on when the off-timer is input. It is off when the time set by the timer is reached.
- If the appliance is on pause at the time set by the timer, the pause continues.

Copyright ©2010 LG Electronics. Inc. All right reserved.
Only for training and service purposes

LGE Internal Use Only

■ Off-Timer <=> On-Timer Operation

- When the set time is reached after the on/off time is input by the remote controller, the on/off-timer operation is carried out according to the set time.

■ Sleep Timer Operation

- When the sleep time is reached after <1,2,3,4,5,6,7,0(cancel) hr> is input by the remote controller while in appliance operation, the operation of the appliance stops.
- While the appliance is on pause, the sleep timer mode cannot be input.
- While in cooling mode operation, 30 min later since the start of the sleep timer, the setting temperature increases by 1°C(34°F) After another 30 min elapse, it increases by 1°C(34°F) again.
- When the sleep timer mode is input while in cooling cycle mode, the airflow speed of the indoor fan is set to the low.
- When the sleep timer mode is input while in heating cycle mode, the airflow speed of the indoor fan is set to the medium.

■ Chaos Swing Mode

- By the Chaos Swing key input, the vane automatically operates with the Chaos Swing or they are fixed to the desired direction.

■ Chaos Natural Wind Mode

- When the Chaos Natural Wind mode is selected and then operated, the high, medium, or low speed of the air-flow mode is operated for 2~15 sec randomly by the Chaos Simulation."

■ Jet Cool Mode Operation (Outdoor unit C/O Model)

- If the Jet Cool key is input at any operation mode while in appliance operation, the Jet Cool mode operates.
- In the Jet Cool mode, the indoor fan is operated at super-high speed for 30 min at cooling mode operation.
- In the Jet Cool mode operation, the room temperature is controlled to the setting temperature, 18°C(64°F)
- When the sleep timer mode is input while in the Jet Cool mode operation, the Jet Cool mode has the priority.
- When the Jet Cool key is input, the upper/lower vanes are reset to those of the initial cooling mode and then operated in order that the air outflow could reach further.

■ Jet Cool Mode Operation (Outdoor unit H/P Model)

- While in heating mode or Fuzzy operation, the Jet Cool key cannot be input. When it is input while in the other mode operation (cooling, dehumidification, ventilation), the Jet Cool mode is operated."
- In the Jet Cool mode, the indoor fan is operated at super-high speed for 30 min at cooling mode operation.
- In the Jet Cool mode operation, the room temperature is controlled to the setting temperature, 18°C(64°F)
- When the sleep timer mode is input while in the Jet Cool mode operation, the Jet Cool mode has the priority.
- When the Jet Cool key is input, the upper/lower vanes are reset to those of the initial cooling mode and then operated in order that the air outflow could reach further.

■ Auto Restarting Operation

- When the power is restored after a sudden power failure while in appliance operation, the mode before the power failure is kept on the memory and the appliance automatically operates in the mode on the memory.
- Operation Mode that is kept on the memory

Copyright ©2010 LG Electronics. Inc. All right reserved.
Only for training and service purposes

LGE Internal Use Only

- State of Operation ON/OFF
- Operation Mode/Setting Temp/Selected Airflow Speed
- Sleep Timer Mode/Remaining Time of Sleep Timer (unit of hour)

■ Forced Operation (Outdoor unit C/O Model)

- To operate the appliance by force in case that the remote controller is lost, the forced operation button is on the main unit of the appliance to operate the appliance in the standard conditions.
- Press the forced operation button, the forced operation is carried out.
- Press the forced operation button once again to stop operation.
- The forced operation is carried out in cooling mode with the setting temperature 22°C(72°F) and the high speed of airflow.

■ Forced Operation (Outdoor unit H/P Model)

- To operate the appliance by force in case that the remote controller is lost, the forced operation selection switch is on the main unit of the appliance to operate the appliance in the standard conditions.
- Press the forced operation button, the forced operation is carried out.
- Press the forced operation button once again to stop operation.
- In the forced operation mode, the indoor fan is operated at low speed for around 15 sec and then the operation condition is set according to the intake air temperature as follows.

  24°C(76°F) ≤ Intake Air Temp => Cooling Mode Operation, 22°C(72°F), High Speed

  21°C(70°F) ≤ Intake Air Temp < 24°C(76°F) => Dehumidification Operation, 23°C(74°F), High Speed

  Intake Air Temp < 21°C(70°F) => Heating Mode Operation, 24°C(76°F), High Speed

■ Test Operation Control

- To check the condition of the installation when installing the appliance, the appliance is operated at cooling mode, high speed of airflow, compressor-on for 18 min without controlling the room temperature.
- After supplying power to the main body, keep pressing the forced operation button for about 3 seconds.
- While in test operation, a key can be input by the remote controller.
  When a key (operation start/stop, operation mode selection, airflow speed selection, temperature control, Jet Cool) is input by the remote controller, the test operation is canceled and the appliance is operated according to the setting by the remote controller.

■ Protection of the evaporator pipe from frosting

- In the temperrature of the indoor pipe is below 0°C(32°F) after 7 minutes from starting the compressor, the compressor and outdoor fan are stopped, and 3 minutes delay of operating of the compressor, when the temperature of the indoor pipe is over 7°C(45°F), the compressor and the outdoor fan are reoperated.
- Outdoor fan motor stops when indoor pipe temperature is blow 3°C(37°F) and restarts at the pipe temperature above 6°C or after 90 seconds, if the pipe temperature does not rise to 6°C(43°F), outdoor fan motor runs continuously at even below 3°C(37°F).

Copyright ©2010 LG Electronics. Inc. All right reserved.
Only for training and service purposes

LGE Internal Use Only

■ Buzzer Sounding Operation

- When the appliance-operation key is input by the remote controller, the short “beep-beep-” sounds.
- When the appliance-pause key is input by the remote controller, the long “beep—” sounds.

■ Air Cleaner Operation

- When an air cleaner function is selected during Air Conditioner operation
  - Plasma air cleaner function will be operated while in any operation mode with selecting the function.
  - The function is to be stopped while it is operating with selecting the function.
- When an air cleaner function is selected during operation off
  - The function will be only operated.
- When inlet grille of air conditioner is opened during plasma operation, High Voltage Generator(H.V.B) is to be stopped. When inlet grille of air conditioner is closed during plasma operation, High Voltage Generator(H.V.B) will be operated again.

Copyright ©2010 LG Electronics. Inc. All right reserved.
Only for training and service purposes

LGE Internal Use Only

3. Dimensions

ART COOL Gallery

ARNU073SF*2
ARNU093SF*2
ARNU123SF*2

[Unit : mm(inch)]

Model	W	H	D
ARNU073SF*2 ARNU093SF*2 ARNU123SF*2	600 (23-5/8)	600 (23-5/8)	146 (5-11/16)

[Unit : mm(inch)]

Number	Name	Description
1	Air discharge grill	
2	Air suction grill	

▣ Note

1. Unit should be installed in compliance with the installation manual in the product box.
2. Unit shall be grounded in accordance with the local regulations or applicable national codes.

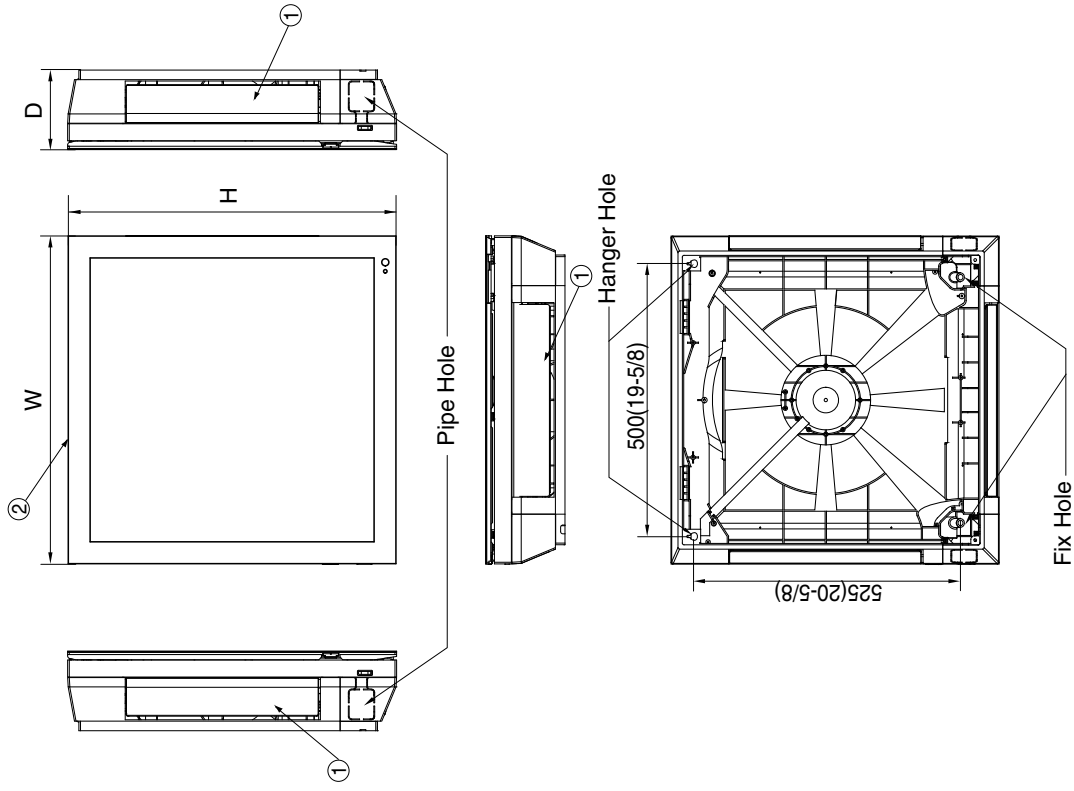

LG Electronics

LG Electronics USA, HVAC Division
1000 Sylvan Avenue, Englewood Cliffs, NJ 07632
www.lgusa.com / www.lghvac.com

76, Seongsan-dong, Changwon City, Gyeongnam,
641-713, Korea
www.lgeaircon.com

CHASSIS CODE: SF

Copyright ©2010 LG Electronics. Inc. All right reserved.
Only for training and service purposes

LGE Internal Use Only

Ceiling Concealed Duct Type (Low static)

1. Funtions 56
2. Operation Details.....57
3. Dimensions 60

Copyright ©2010 LG Electronics. Inc. All right reserved.
Only for training and service purposes

LGE Internal Use Only

1. Funtions

Indoor Unit

- **Operation ON/OFF by Remote controller**
- **Sensing the Room Temperature** • Room temperature sensor. (Thermistor)
- **Room temperature control** • Maintains the room temperature in accordance with the Setting Temperature.
- **Starting Current Control** • Indoor fan is delayed for 5 seconds at the starting.
- **Indoor Fan Speed Control** • High, Med, Low
- **Soft Dry Operation Mode** • Intermittent operation of fan at low speed.
- **Auto Restart** • Although the air-conditioner is turned off by a power failure, it is restarted automatically previous operation mode after power supply.
- **Deice (defrost) control (Heating)** • Both the indoor and outdoor fan stops during defrosting. • Hot start after defrost ends.
- **Hot-start Control (Heating)** • The indoor fan does not rotate until the evaporator piping temperature reaches 25°C(76°F).
- **High head height Drain pump** • A standard drain-head height of up to 700mm(27-9/16inch) is possible.
- **Central Control(Optional)** • It is operating individually or totally by central control function.

Copyright ©2010 LG Electronics. Inc. All right reserved.
Only for training and service purposes

LGE Internal Use Only

2. Operation Details

(1) The function of main control

■ Soft-Dry Operation

• The indoor fan speed is automatically set to the low, so the shift of the indoor fan speed is impossible because of already being set to the best speed for Dry Operation by microcontroller control.

■ Cooling Mode Operation

• When selecting the Cooling(❄) Mode Operation, the unit will operate according to the setting by the remote controller and the operation diagram is as following.

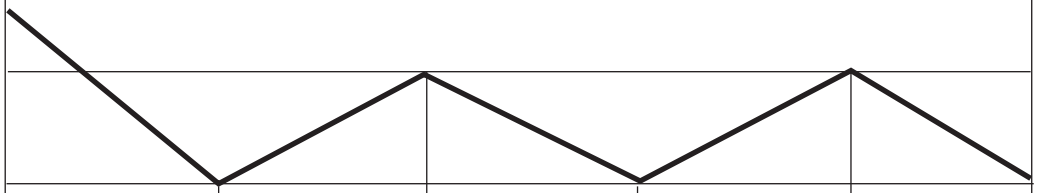

INDOOR FAN	Selecting fan speed	Low	Selecting fan speed	Low	Selecting fan speed
COMPRESSOR	ON	OFF	ON	OFF	ON

	Thermal ON	Thermal OFF
Indoor Unit mode	ST+0.5	ST-0.5
2TH (Remo.+Indoor)	To be selected higher temperature contrast Indoor Unit and Remo.	To be selected higher temperature contrast Indoor Unit and Remo.
Remo. Mode	ST+0.5	ST-0.5

Copyright ©2010 LG Electronics. Inc. All right reserved.
Only for training and service purposes

LGE Internal Use Only

■ Heating Mode Operation

The unit will operate according to the setting by the remote controller and the operation diagram is shown as following.

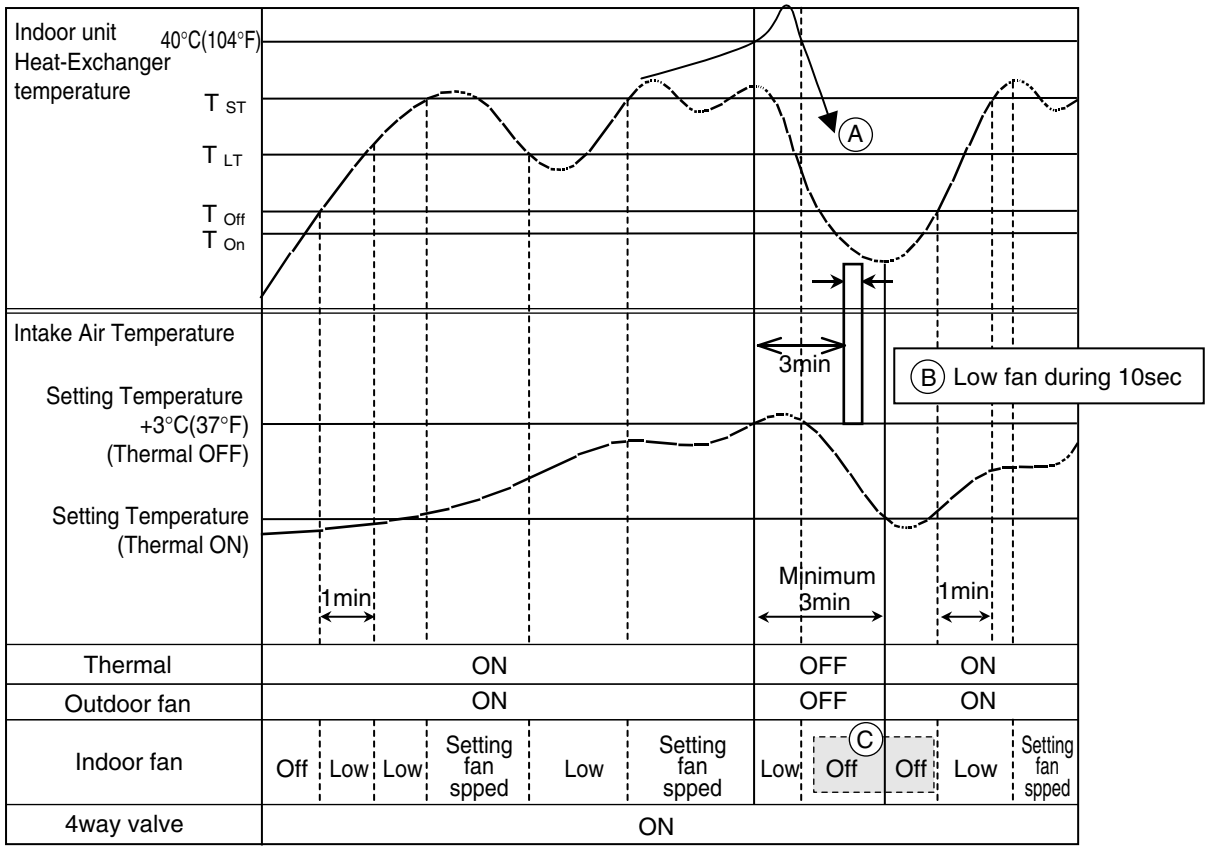

- **Compressor-off interval** : - Ⓐ While the indoor Heat-Exchanger temperature is higher than 40°C(104°F), fan operates at low speed, when it becomes lower than 40°C(104°F) fan stops.
  - Ⓑ For eluminating latent heat-loss, fan operates at low speed for 10 seconds periodically.
  - Ⓒ To be operated "Low" except initial Hotstart operation

	High Static			Low Static				Convertible	
Chassis	BH	BG	BR	B1	B2	CE	CF	VE	VJ
Hotstart On T_{On}	19°C(66°F)	19°C(66°F)	19°C(66°F)	19°C(66°F)	19°C(66°F)	19°C(66°F)	19°C(66°F)	26°C(78°F)	26°C(78°F)
Hotstart Off T_{Off}	22°C(72°F)	22°C(72°F)	22°C(72°F)	22°C(72°F)	22°C(72°F)	22°C(72°F)	22°C(72°F)	27°C(80°F)	27°C(80°F)
Low temperature T_{LT}	25°C(76°F)	25°C(76°F)	25°C(76°F)	25°C(76°F)	25°C(76°F)	25°C(76°F)	25°C(76°F)	28°C(82°F)	28°C(82°F)
Setting Temperature T_{ST}	27°C(80°F)	27°C(80°F)	27°C(80°F)	27°C(80°F)	27°C(80°F)	27°C(80°F)	27°C(80°F)	30°C(86°F)	30°C(86°F)

Copyright ©2010 LG Electronics. Inc. All right reserved.
Only for training and service purposes

LGE Internal Use Only

■ Hot-Start Control

• The indoor fan does not rotate until the indoor unit Hex-Exchanger temperature reaches 30°C(86°F).

• The operation diagram is as following.

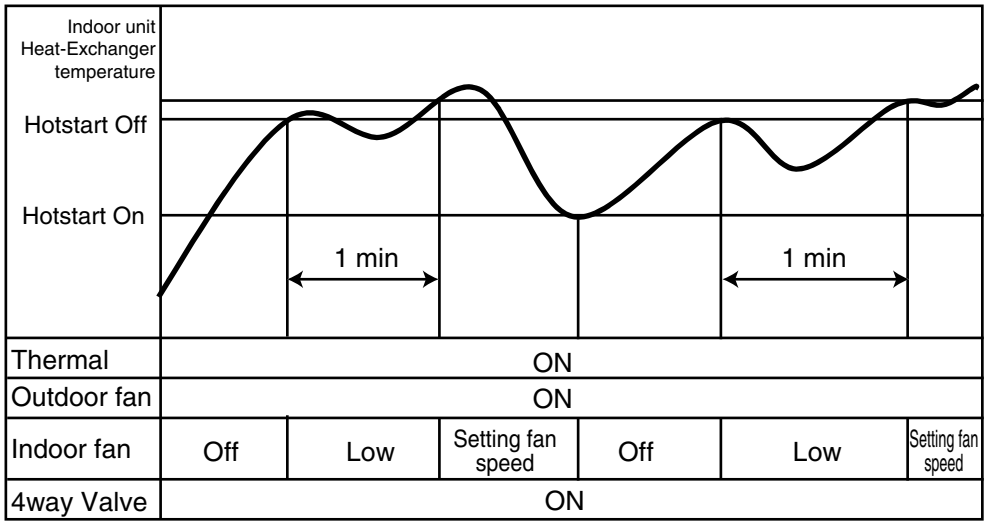

• Initial Hotstart On state

① Power Off ➠ On
② Operation Off ➠ On
③ Cooling operation ➠ Heating operation
④ Defrost operation

Copyright ©2010 LG Electronics. Inc. All right reserved.
Only for training and service purposes

LGE Internal Use Only

3. Dimensions

Ceiling Concealed Duct (Low Static)

ARNU073B1G2
ARNU093B1G2
ARNU123B1G2
ARNU153B1G2
ARNU183B2G2
ARNU243B2G2

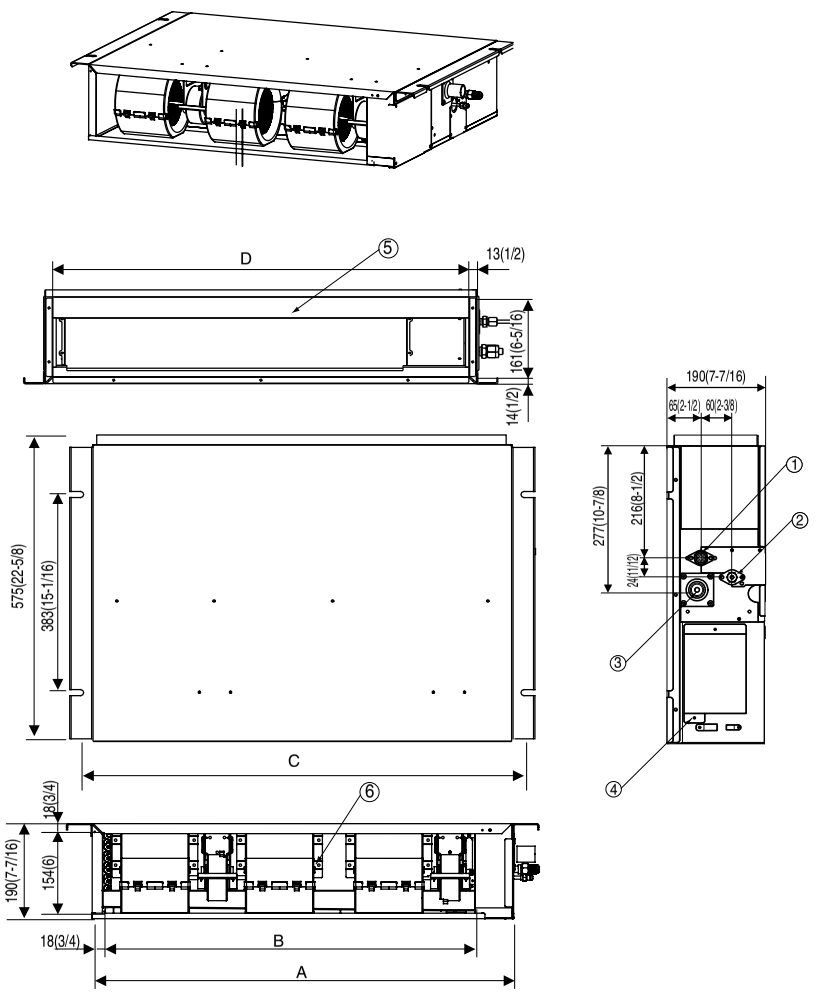

[Unit : mm(inch)]

	A	B	C	D
ARNU073B1G2 ARNU093B1G2 ARNU123B1G2 ARNU153B1G2	820 (32-5/16)	728 (28-11/16)	856 (33-11/16)	794 (31-5/16)
ARNU183B2G2 ARNU243B2G2	1100 (43-5/16)	1008 (39-11/16)	1131 (44-9/16)	1072 (42-3/16)

[Unit : mm(inch)]

Number	Name	Descripition
1	Liquid pipe connection	Unit size(7k,9k,12k,18k):ø6.35(1/4) Unit size(24k):ø9.52(3/8)
2	Gas pipe connection	Unit size(7k,9k,12k,18k):ø12.7(1/2) Unit size(24k):ø15.88(5/8)
3	Drain pipe connection	
4	Power supply connection	
5	Air discharge	
6	Air suction	

▣ Note

1. Unit should be installed in compliance with the installation manual in the product box.
2. Unit shall be grounded in accordance with the local regulations or applicable national codes.

LG Electronics

LG Electronics USA, HVAC Division
1000 Sylvan Avenue, Englewood Cliffs, NJ 07632
www.lgusa.com / www.lghvac.com

76, Seongsan-dong, Changwon City, Gyeongnam,
641-713, Korea
www.lgeaircon.com

CHASSIS CODE: B1/B2

Copyright ©2010 LG Electronics. Inc. All right reserved.
Only for training and service purposes

LGE Internal Use Only

Ceiling Concealed Duct Type (Built in)

1. Funtions 62
2. Operation Details.....63
3. Dimensions 66

Copyright ©2010 LG Electronics. Inc. All right reserved.
Only for training and service purposes

LGE Internal Use Only

1. Funtions

Indoor Unit

- **Operation ON/OFF by Remote controller**
- **Sensing the Room Temperature** • Room temperature sensor. (Thermistor)
- **Room temperature control** • Maintains the room temperature in accordance with the Setting Temperature.
- **Starting Current Control** • Indoor fan is delayed for 5 seconds at the starting.
- **Indoor Fan Speed Control** • High, Med, Low
- **Soft Dry Operation Mode** • Intermittent operation of fan at low speed.
- **Auto Restart** • Although the air-conditioner is turned off by a power failure, it is restarted automatically previous operation mode after power supply.
- **Deice (defrost) control (Heating)** • Both the indoor and outdoor fan stops during defrosting. • Hot start after defrost ends.
- **Hot-start Control (Heating)** • The indoor fan does not rotate until the evaporator piping temperature reaches 25°C(76°F).
- **High head height Drain pump** • A standard drain-head height of up to 700mm(27-9/16inch) is possible.
- **Central Control(Optional)** • It is operating individually or totally by central control function.

Copyright ©2010 LG Electronics. Inc. All right reserved.
Only for training and service purposes

LGE Internal Use Only

2. Operation Details

(1) The function of main control

■ Soft-Dry Operation

• The indoor fan speed is automatically set to the low, so the shift of the indoor fan speed is impossible because of already being set to the best speed for Dry Operation by microcontroller control.

■ Cooling Mode Operation

• When selecting the Cooling(❄) Mode Operation, the unit will operate according to the setting by the remote controller and the operation diagram is as following.

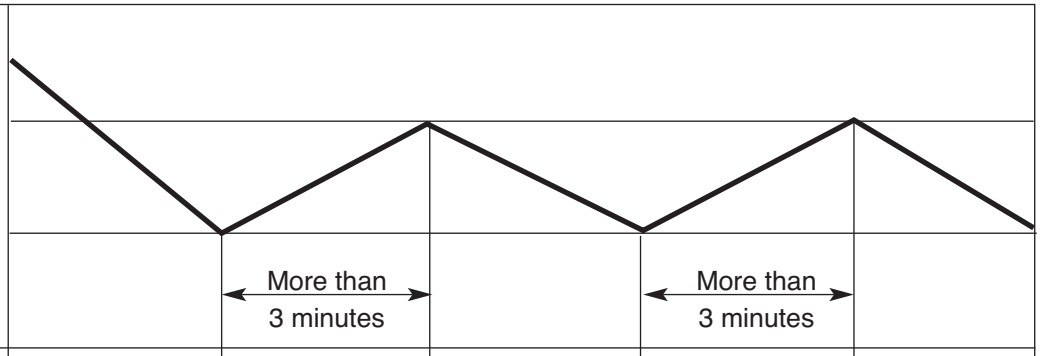

INDOOR FAN	Selecting fan speed	Low	Selecting fan speed	Low	Selecting fan speed
COMPRESSOR	ON	OFF	ON	OFF	ON

	Thermal ON	Thermal OFF
Indoor Unit mode	ST+0.5	ST-0.5
2TH (Remo.+Indoor)	To be selected higher temperature contrast Indoor Unit and Remo.	To be selected higher temperature contrast Indoor Unit and Remo.
Remo. Mode	ST+0.5	ST-0.5

Copyright ©2010 LG Electronics. Inc. All right reserved.
Only for training and service purposes

LGE Internal Use Only

■ Heating Mode Operation

The unit will operate according to the setting by the remote controller and the operation diagram is shown as following.

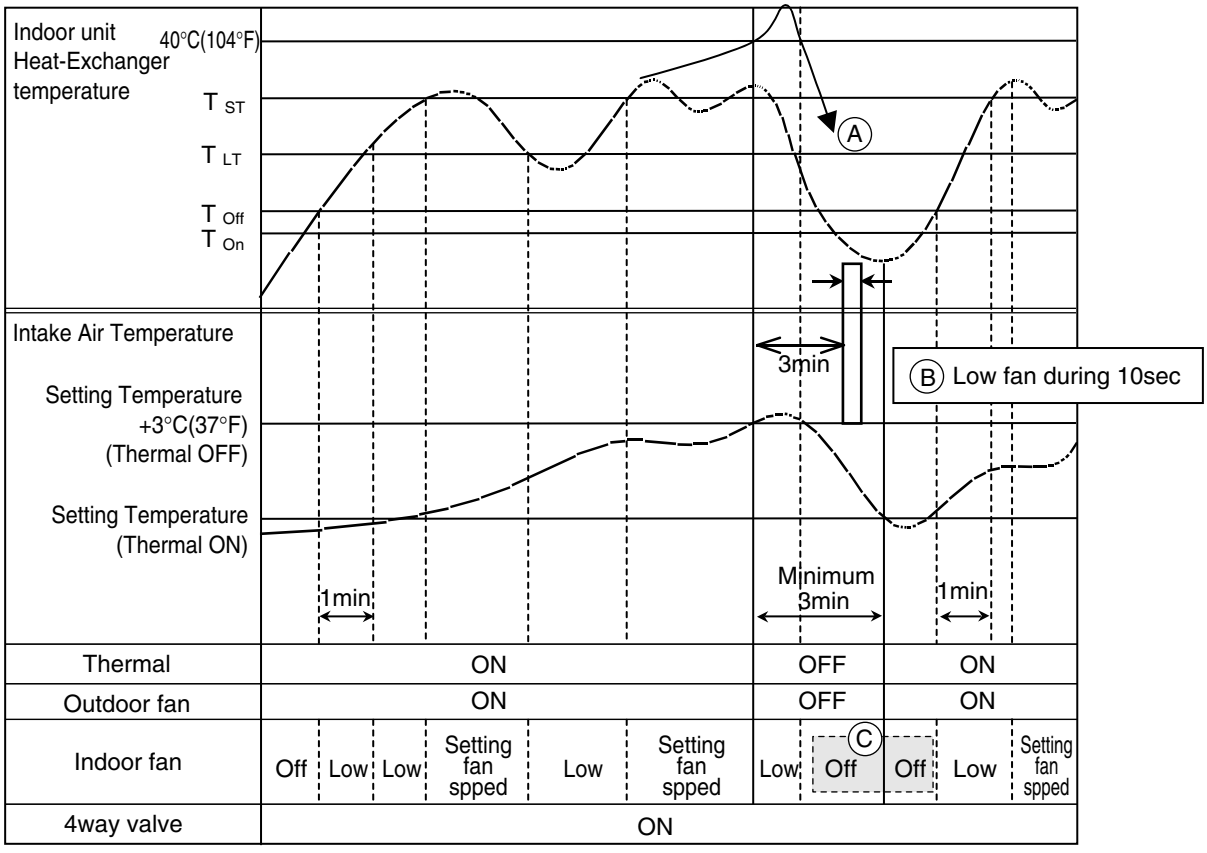

• **Compressor-off interval** : - Ⓐ While the indoor Heat-Exchanger temperature is higher than 40°C(104°F), fan operates at low speed, when it becomes lower than 40°C(104°F) fan stops.
- Ⓑ For eluminating latent heat-loss, fan operates at low speed for 10 seconds periodically.
- Ⓒ To be operated "Low" except initial Hotstart operation

	High Static			Low Static				Convertible	
Chassis	BH	BG	BR	B1	B2	CE	CF	VE	VJ
Hotstart On T_{On}	19°C(66°F)	19°C(66°F)	19°C(66°F)	19°C(66°F)	19°C(66°F)	19°C(66°F)	19°C(66°F)	26°C(78°F)	26°C(78°F)
Hotstart Off T_{Off}	22°C(72°F)	22°C(72°F)	22°C(72°F)	22°C(72°F)	22°C(72°F)	22°C(72°F)	22°C(72°F)	27°C(80°F)	27°C(80°F)
Low temperature T_{LT}	25°C(76°F)	25°C(76°F)	25°C(76°F)	25°C(76°F)	25°C(76°F)	25°C(76°F)	25°C(76°F)	28°C(82°F)	28°C(82°F)
Setting Temperature T_{ST}	27°C(80°F)	27°C(80°F)	27°C(80°F)	27°C(80°F)	27°C(80°F)	27°C(80°F)	27°C(80°F)	30°C(86°F)	30°C(86°F)

Copyright ©2010 LG Electronics. Inc. All right reserved.
Only for training and service purposes

LGE Internal Use Only

■ Hot-Start Control

• The indoor fan does not rotate until the indoor unit Hex-Exchanger temperature reaches 30°C(86°F).

• The operation diagram is as following.

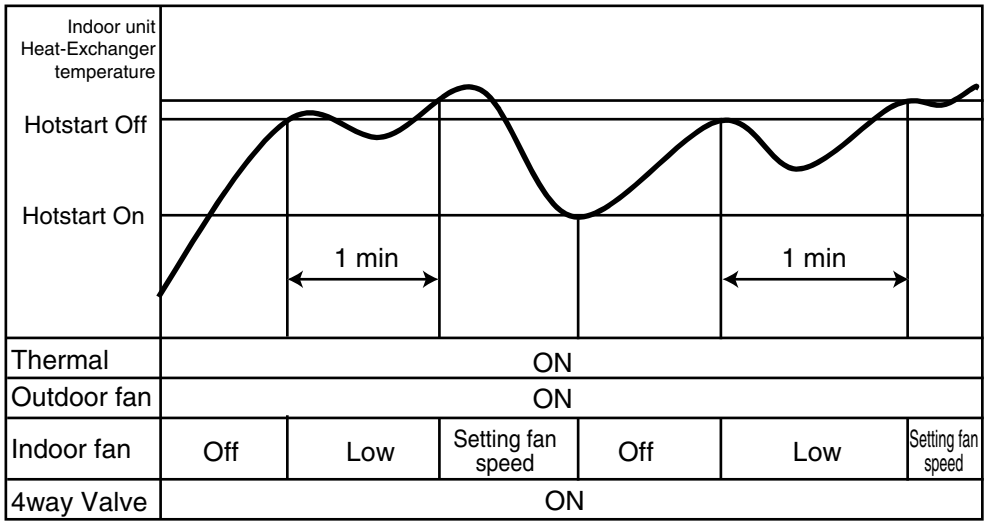

• Initial Hotstart On state

① Power Off ➠ On
② Operation Off ➠ On
③ Cooling operation ➠ Heating operation
④ Defrost operation

Copyright ©2010 LG Electronics. Inc. All right reserved.
Only for training and service purposes

LGE Internal Use Only

3. Dimensions

Ceiling Concealed Duct (Built in)

ARNU073B3G2+PBSGB30(Accessory), PBSC30(Accessory)
ARNU093B3G2+PBSGB30(Accessory), PBSC30(Accessory)
ARNU123B3G2+PBSGB30(Accessory), PBSC30(Accessory)
ARNU153B3G2+PBSGB30(Accessory), PBSC30(Accessory)
ARNU183B4G2+PBSGB40(Accessory), PBSC40(Accessory)
ARNU243B4G2+PBSGB40(Accessory), PBSC40(Accessory)

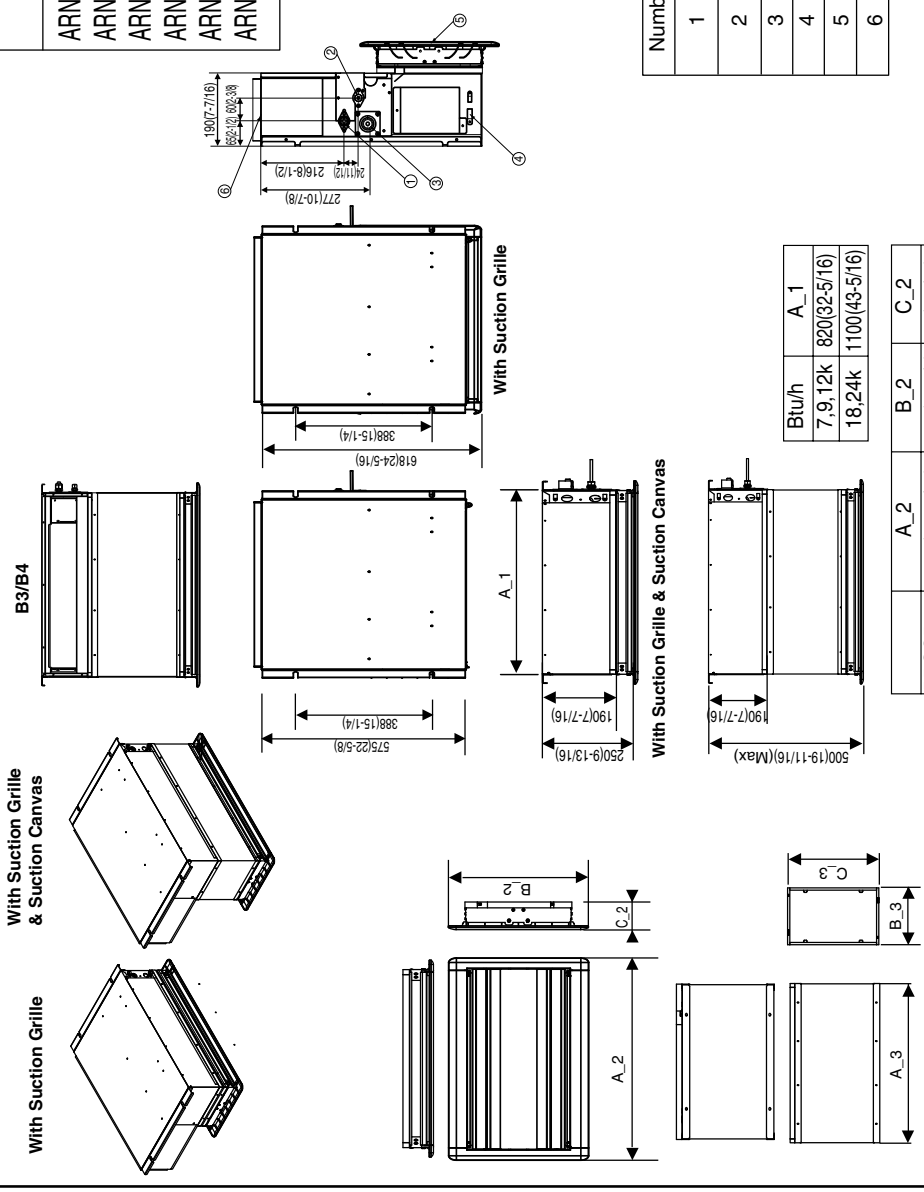

[Unit : mm(inch)]

Number	Name	Description
1	Liquid pipe connection	Unit size(7k,9k,12k,18k):ø6.35(1/4) Unit size(24k):ø9.52(3/8)
2	Gas pipe connection	Unit size(7k,9k,12k,18k):ø12.7(1/2) Unit size(24k):ø15.88(5/8)
3	Drain pipe connection	
4	Power supply connection	
5	Air discharge	
6	Air suction	

Btu/h	A_1
7,9,12k	820(32-5/16)
18,24k	1100(43-5/16)

	A_2	B_2	C_2
PBSGB30	910(35-13/16)	359(14-1/8)	56(2-3/16)
PBSGB40	1188(46-13/16)	359(14-1/8)	56(2-3/16)

	A_3	B_3	C_3
PBSC30	821(32-5/16)	274(10-11/16)	42~250(1-9/16~9-13/16)
PBSC40	1100(43-5/16)	274(10-11/16)	42~250(1-9/16~9-13/16)

▣ Note

1. Unit should be installed in compliance with the installation manual in the product box.
2. Unit shall be grounded in accordance with the local regulations or applicable national codes.

LG Electronics

LG Electronics USA, HVAC Division
1000 Sylvan Avenue, Englewood Cliffs, NJ 07632
www.lgusa.com / www.lghvac.com

76, Seongsan-dong, Changwon City, Gyeongnam,
641-713, Korea
www.lgeaircon.com

CHASSIS CODE: B3/B4

Copyright ©2010 LG Electronics. Inc. All right reserved.
Only for training and service purposes

LGE Internal Use Only

Ceiling Concealed Duct Type (High Static)

1. Funtions 68
2. Operation Details.....69
3. Dimensions 72

Copyright ©2010 LG Electronics. Inc. All right reserved.
Only for training and service purposes

LGE Internal Use Only

1. Funtions

Indoor Unit

- **Operation ON/OFF by Remote controller**
- **Sensing the Room Temperature** • Room temperature sensor. (Thermistor)
- **Room temperature control** • Maintains the room temperature in accordance with the Setting Temperature.
- **Starting Current Control** • Indoor fan is delayed for 5 seconds at the starting.
- **Indoor Fan Speed Control** • High, Med, Low
- **Soft Dry Operation Mode** • Intermittent operation of fan at low speed.
- **Auto Restart** • Although the air-conditioner is turned off by a power failure, it is restarted automatically previous operation mode after power supply.
- **Deice (defrost) control (Heating)** • Both the indoor and outdoor fan stops during defrosting. • Hot start after defrost ends.
- **Hot-start Control (Heating)** • The indoor fan does not rotate until the evaporator piping temperature reaches 25°C(76°F)
- **High head height Drain pump** • A standard drain-head height of up to 700mm(27-9/16inch) is possible.
- **Central Control(Optional)** • It is operating individually or totally by central control function.

Copyright ©2010 LG Electronics. Inc. All right reserved.
Only for training and service purposes

LGE Internal Use Only

2. Operation Details

(1) The function of main control

■ Soft-Dry Operation

• The indoor fan speed is automatically set to the low, so the shift of the indoor fan speed is impossible because of already being set to the best speed for Dry Operation by microcontroller control.

■ Cooling Mode Operation

• When selecting the Cooling(❄) Mode Operation, the unit will operate according to the setting by the remote controller and the operation diagram is as following.

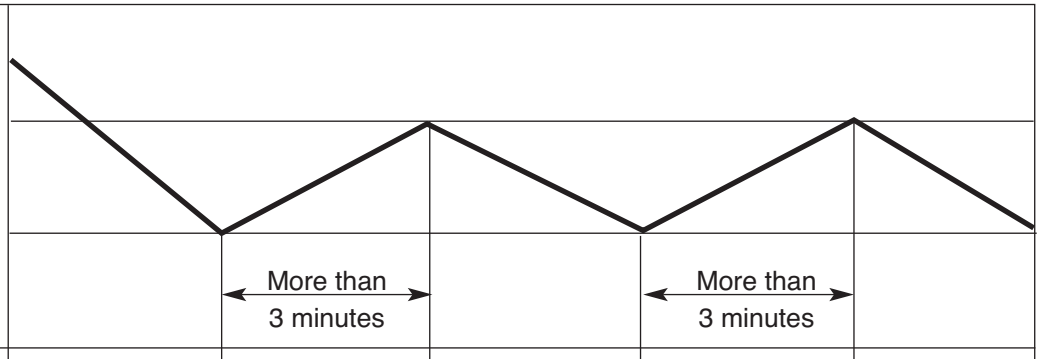

INDOOR FAN	Selecting fan speed	Low	Selecting fan speed	Low	Selecting fan speed
COMPRESSOR	ON	OFF	ON	OFF	ON

Copyright ©2010 LG Electronics. Inc. All right reserved.
Only for training and service purposes

LGE Internal Use Only

■ Heating Mode Operation

The unit will operate according to the setting by the remote controller and the operation diagram is shown as following.

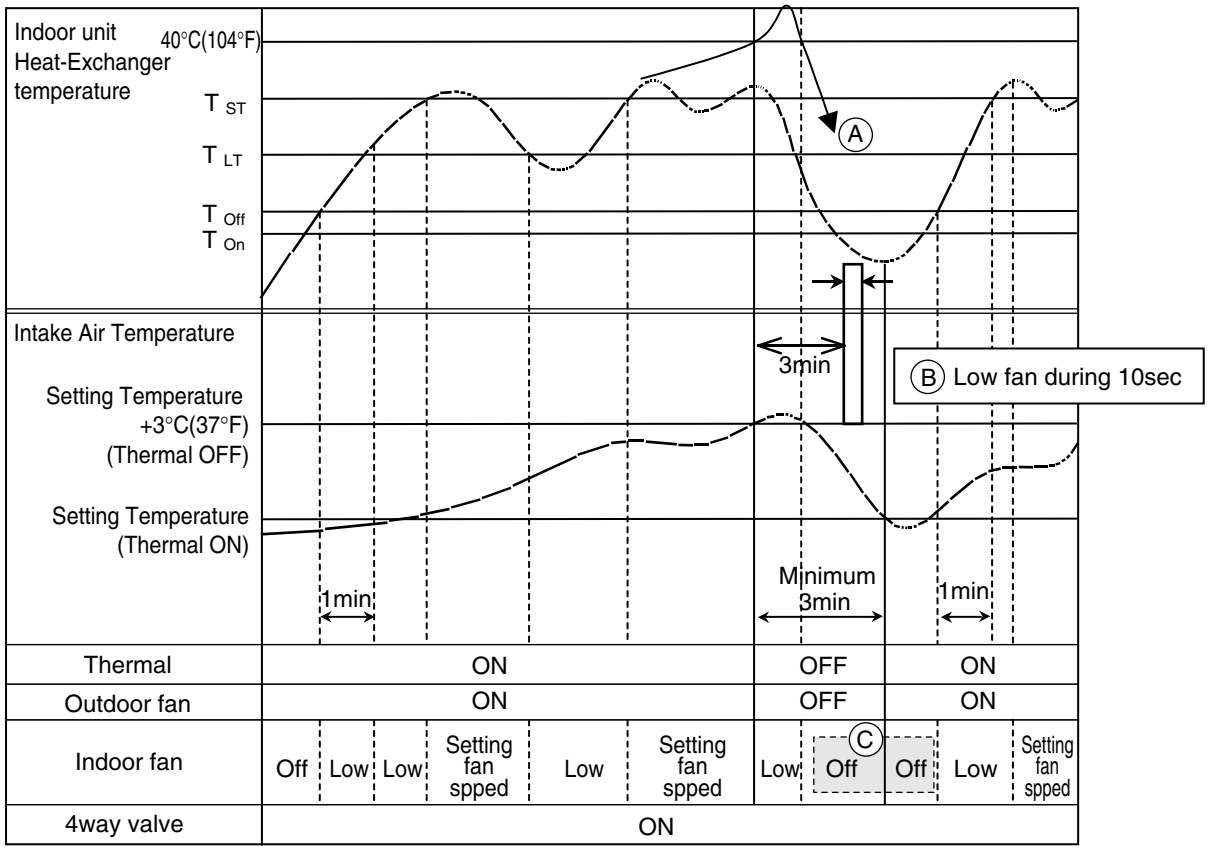

- **Compressor-off interval** : - Ⓐ While the indoor Heat-Exchanger temperature is higher than 40°C(104°F), fan operates at low speed, when it becomes lower than 40°C(104°F) fan stops.
  - Ⓑ For eluminating latent heat-loss, fan operates at low speed for 10 seconds periodically.
  - Ⓒ To be operated "Low" except initial Hotstart operation

	High Static			Low Static				Convertible	
Chassis	BH	BG	BR	B1	B2	CE	CF	VE	VJ
Hotstart On T_{On}	19°C(66°F)	19°C(66°F)	19°C(66°F)	19°C(66°F)	19°C(66°F)	19°C(66°F)	19°C(66°F)	26°C(78°F)	26°C(78°F)
Hotstart Off T_{Off}	22°C(72°F)	22°C(72°F)	22°C(72°F)	22°C(72°F)	22°C(72°F)	22°C(72°F)	22°C(72°F)	27°C(80°F)	27°C(80°F)
Low temperature T_{LT}	25°C(76°F)	25°C(76°F)	25°C(76°F)	25°C(76°F)	25°C(76°F)	25°C(76°F)	25°C(76°F)	28°C(82°F)	28°C(82°F)
Setting Temperature T_{ST}	27°C(80°F)	27°C(80°F)	27°C(80°F)	27°C(80°F)	27°C(80°F)	27°C(80°F)	27°C(80°F)	30°C(86°F)	30°C(86°F)

Copyright ©2010 LG Electronics. Inc. All right reserved.
Only for training and service purposes

LGE Internal Use Only

■ Hot-Start Control

• The indoor fan does not rotate until the indoor unit Hex-Exchanger temperature reaches 30°C(86°F).

• The operation diagram is as following.

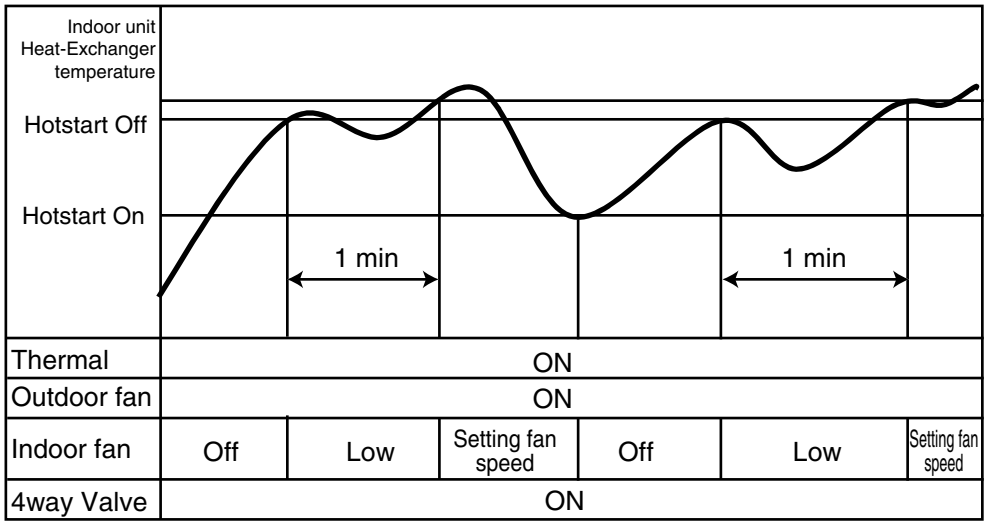

• Initial Hotstart On state

① Power Off ➠ On
② Operation Off ➠ On
③ Cooling operation ➠ Heating operation
④ Defrost operation

Copyright ©2010 LG Electronics. Inc. All right reserved.
Only for training and service purposes

LGE Internal Use Only

3. Dimensions

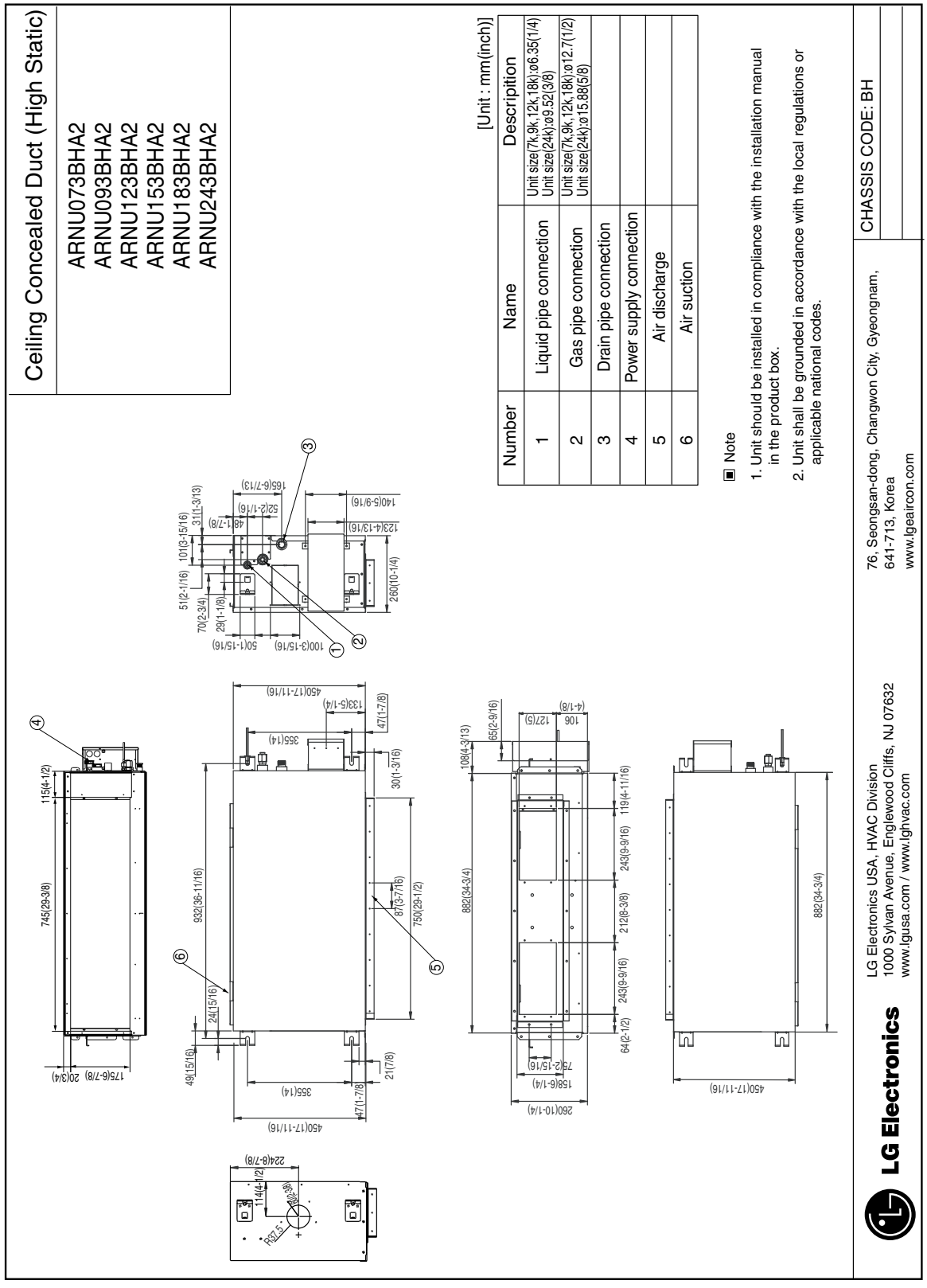

Copyright ©2010 LG Electronics. Inc. All right reserved.
Only for training and service purposes

LGE Internal Use Only

Ceiling Concealed Duct (High Static)

ARNU283BGA2
ARNU363BGA2
ARNU423BGA2

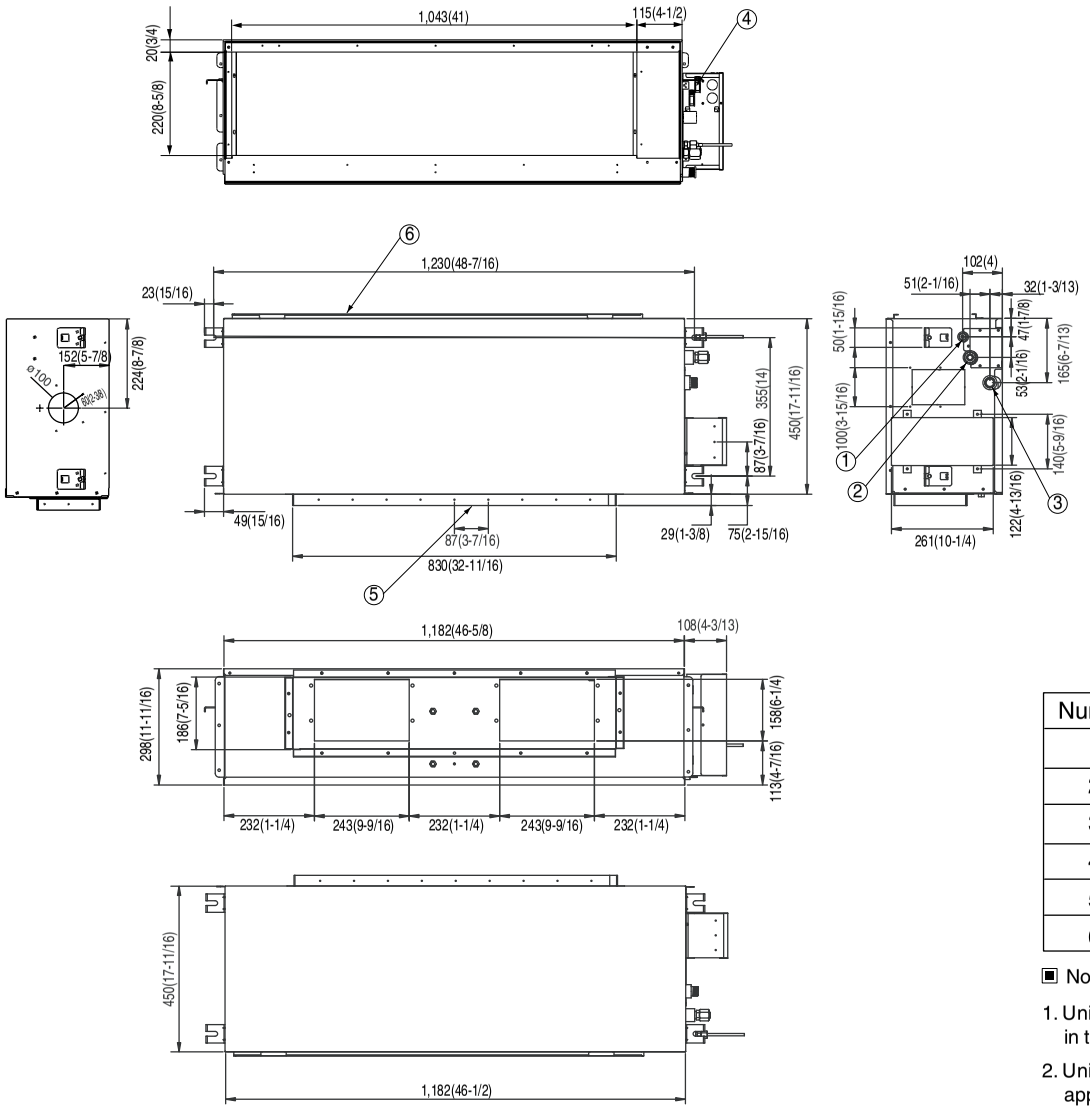

[Unit : mm(inch)]

Number	Name	Descripition
1	Liquid pipe connection	Unit size(28k,36k,42k):ø9.52(3/8)
2	Gas pipe connection	Unit size(28k,36k,42k):ø15.88(5/8)
3	Drain pipe connection	
4	Power supply connection	
5	Air discharge	
6	Air suction	

■ Note

1. Unit should be installed in compliance with the installation manual in the product box.
2. Unit shall be grounded in accordance with the local regulations or applicable national codes.

LG Electronics

LG Electronics USA, HVAC Division
1000 Sylvan Avenue, Englewood Cliffs, NJ 07632
www.lgusa.com / www.lghvac.com

76, Seongsan-dong, Changwon City, Gyeongnam,
641-713, Korea
www.lgeaircon.com

CHASSIS CODE: BG

Copyright ©2010 LG Electronics. Inc. All right reserved.
Only for training and service purposes

LGE Internal Use Only

Ceiling Concealed Duct (High Static)

ARNU483BRA2

[Unit : mm(inch)]

Number	Name	Description
1	Liquid pipe connection	Unit size(48k):ø9.52(3/8)
2	Gas pipe connection	Unit size(48k):ø15.88(5/8)
3	Drain pipe connection	
4	Power supply connection	
5	Air discharge	
6	Air suction	

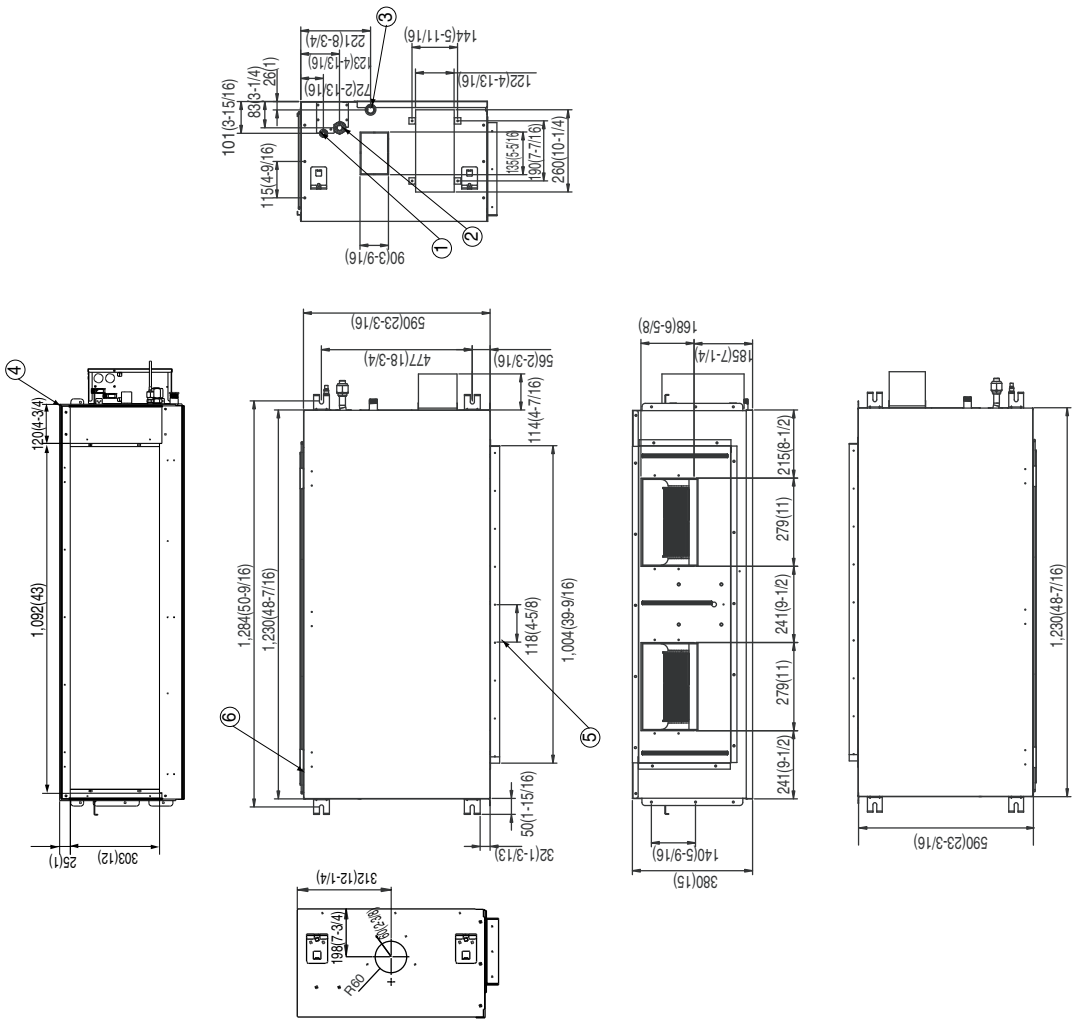

▣ Note

1. Unit should be installed in compliance with the installation manual in the product box.
2. Unit shall be grounded in accordance with the local regulations or applicable national codes.

LG Electronics

LG Electronics USA, HVAC Division
1000 Sylvan Avenue, Englewood Cliffs, NJ 07632
www.lgusa.com / www.lghvac.com

76, Seongsan-dong, Changwon City, Gyeongnam,
641-713, Korea
www.lgeaircon.com

CHASSIS CODE: BR

Copyright ©2010 LG Electronics. Inc. All right reserved.
Only for training and service purposes

LGE Internal Use Only

Ceiling Concealed Duct (High Static)

URNU763B8A2
URNU963B8A2

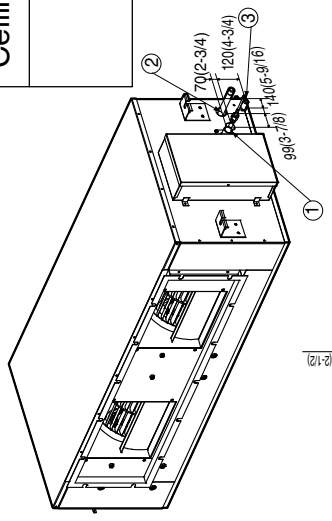

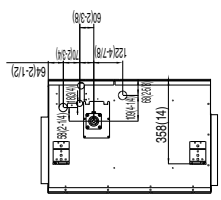

[Unit : mm(inch)]

Number	Name	Description
1	Liquid pipe connection	Unit size(76k,96k):ø9.52(3/8)
2	Gas pipe connection	Unit size(76k):ø19.05(3/4) Unit size(96k):ø22.2(7/8)
3	Drain pipe connection	
4	Power supply connection	
5	Air discharge	
6	Air suction	

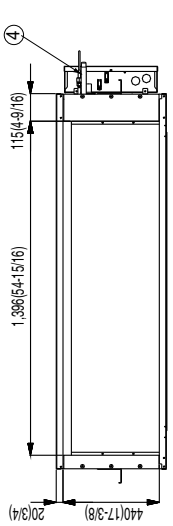

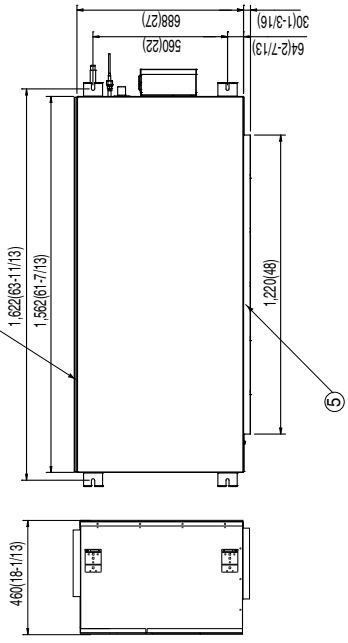

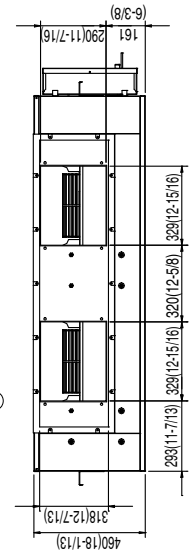

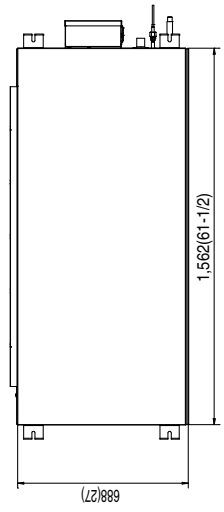

■ Note

1. Unit should be installed in compliance with the installation manual in the product box.
2. Unit shall be grounded in accordance with the local regulations or applicable national codes.

LG Electronics

LG Electronics USA, HVAC Division
1000 Sylvan Avenue, Englewood Cliffs, NJ 07632
www.lgusa.com / www.lghvac.com

76, Seongsan-dong, Changwon City, Gyeongnam,
641-713, Korea
www.lgeaircon.com

CHASSIS CODE: B8

Copyright ©2010 LG Electronics. Inc. All right reserved.
Only for training and service purposes

LGE Internal Use Only

Wall Mountedd Type

1. Functions 77
2. Operation Details.....78
3. Dimensions 85

Copyright ©2010 LG Electronics. Inc. All right reserved.
Only for training and service purposes

LGE Internal Use Only

1. Functions

Indoor Unit

Operation ON/OFF by Remote controller

Sensing the Room Temperature

• Room temperature sensor. (THERMISTOR)

Room temperature control

• Maintains the room temperature in accordance with the Setting temperature

Starting Current Control

• Indoor fan is delayed for 5 sec at the starting.

Indoor Fan Speed Control

• High, Med, Low, CHAOS

Operation indication Lamps (LED)

Signal Receptor
Receives the signals from the remote control.(Signal receiving sound: two short beeps or one long beep.)
Operation Indication Lamps

⏻	On/Off	: Lights up during the system operation.
☆	Sleep Mode	: Lights up during Sleep Mode Auto operation.
◷	Timer	: Lights up during Timer operation.
✳	Defrost Mode	: Lights up during Defrost Mode or Hot Start operation.
88	Temperature	: Indicate the setting temperature.

Soft Dry Operation Mode

• Intermittent operation of fan at low speed.

Sleep Mode Auto Control

• The fan is switched to low(Cooling), med(Heating) speed.
• The unit will be stopped after 1, 2, 3, 4, 5, 6, 7 hours.

Natural Air Control by CHAOS Logic

• The fan is switched to intermittent or irregular operation
• The fan speed is automatically switched from high to low speed.

Airflow Direction Control

• The louver can be set at the desired position or swing up and down automatically.

Defrost(Deice) control (Heating)

• Both the indoor and outdoor fan stops during defrosting.

Hot-start Control (Heating)

• The indoor fan does not rotate until the evaporator pipe temperature will be reached at 28°C(82°F).

Copyright ©2010 LG Electronics. Inc. All right reserved.
Only for training and service purposes

LGE Internal Use Only

2. Operation Details

Function of Controls

DISPLAY

(1) High quality LCD remote controller supplied

Operation Indicator
- On while in appliance operation, off while in appliance pause

Timer(on/off) and Sleep timer Indicator
- On while in timer mode (on/off) and in sleep timer mode, off when timer mode is completed or canceled

Defrost Indicator
- Off except when hot start during heating mode operation or while in defrost control.

Plasma Indicator
- On while in plasma mode, off while plasma mode is canceled.

Auto restart
- In case the power comes on again after a power failure, Auto Restarting Operation is the function to operate procedures automatically to the previous operating conditions.
  If your want to use this operation, press the Auto Restart Button.

Power(Forced Operation)
- Operation starts, when this button is pressed and stops when you press the button again.

■ Cooling Mode Operation

- When the intake air temperature reaches 0.5°C(33°F) below the setting temp, the compressor and the outdoor fan stop.
- When it reaches 0.5°C(33°F) above the setting temp, they start to operate again.
  Compressor ON Temp=> Setting Temp+0.5°C(33°F)
  Compressor OFF Temp => Setting Temp-0.5°C(33°F)
- While in compressor running, operating with the airflow speed set by the remote controller. While in compressor not running, operating with the low airflow speed regardless of the setting.

Copyright ©2010 LG Electronics. Inc. All right reserved.
Only for training and service purposes

LGE Internal Use Only

■ Healthy Dehumidification Mode

- When the dehumidification operation input by the remote controller is received, the intake air temperature is detected and the setting temp is automatically set according to the intake air temperature.

  26°C(78°F) ≤ Intake Air Temp => 25°C(76°F)

  24°C(76°F) ≤ Intake Air Temp < 26°C(78°F) => Intake Air Temp-1°C(34°F)

  18°C(64°F) ≤ Intake Air Temp < 24°C(76°F) => Intake Air Temp-0.5°C(33°F)

  Intake Air Temp < 18°C(64°F) => 18°C(64°F)
- While in compressor off, the indoor fan repeats low airflow speed and pause.
- While the intake air temp is between compressor on temp. and compressor off temp., 10-min dehumidification operation and 4-min compressor off repeat

  Compressor ON Temp. => Setting Temp+0.5°C(33°F)

  Compressor OFF Temp. => Setting Temp-0.5°C(33°F)
- In 10-min dehumidification operation, the indoor fan operates with the low airflow speed.

■ Heating Mode Operation

- When the intake air temp reaches +3°Cabove the setting temp, the compressor is turned off. When below the setting temp, the compressor is turned on.

  Thermo ON Temp. => Setting Temp. +2°C(36°F)

  Thermo OFF Temp. => Setting Temp. +4°C(39°F)
- While in compressor on, when above 38°C(100°F) , it operates with or setting airflow speed (while in sleep mode, with the medium airflow speed).
- While in compressor off, the indoor fan is off when the indoor pipe temp is below 33°C(92°F) , when above 35°C(94°F) , it operates with the low airflow speed.
- While in defrost control, both of the indoor and outdoor fans are turned off.

■ Defrost Control

- While in heating mode operation in order to protect outdoor unit from freezing, reversed to cooling cycle to defrost the outdoor unit.

■ Fuzzy Operation (Outdoor unit C/O Model)

- According to the temperature set by Fuzzy rule, when the intake air temp is 0.5°C(33°F) or more below the setting temp, the compressor is turned off. When 0.5°C (33°F) or more above the setting temp, the compressor is turned on.

  Compressor ON Temp => Setting Temp+0.5°C(33°F)

  Compressor OFF Temp => Setting Temp+0.5°C(33°F)
- At the beginning of Fuzzy mode operation, the setting temperature is automatically selected according to the intake air temp at that time.

Copyright ©2010 LG Electronics. Inc. All right reserved.
Only for training and service purposes

LGE Internal Use Only

26°C(78°F) ≤ Intake Air Temp => 25°C(76°F)

24°C(76°F) ≤ Intake Air Temp<26°C(78°F) => Intake Air Temp+1°C(34°F)

22°C(72°F) ≤ Intake Air Temp<24°C(76°F) => Intake Air Temp+0.5°C(33°F)

18°C(64°F) ≤ Intake Air Temp<22°C(72°F) => Intake Air Temp

Intake Air Temp<18°C(64°F) => 18°C(64°F)

- When the Fuzzy key (Temperature Control key) is input after the initial setting temperature is selected, the Fuzzy key value and the intake air temperature at that time are compared to select the setting temperature automatically according to the Fuzzy rule.
- While in Fuzzy operation, the airflow speed of the indoor fan is automatically selected according to the temperature

■ Fuzzy Operation (Outdoor unit H/P Model)

- When any of operation mode is not selected like the moment of the power on or when 3 hrs has passed since the operation off, the operation mode is selected.
- When determining the operation mode, the compressor, the outdoor fan, and the 4 way valve are off and only the indoor fan is operated for 15 seconds. Then an operation mode is selected according to the intake air temp at that moment as follows.

24°C(76°F) ≤ Inatake Air Temp => Fuzzy Operation for Cooling

21°C(70°F) ≤ Inatake Air Temp<24°C(76°F) => Fuzzy Operation for Dehumidification

Inatake Air Temp<21°C(70°F) => Fuzzy Operation for Heating

- If any of the operation modes among cooling / dehumidification / heating mode operations is carried out for 10 sec or longer before Fuzzy operation, the mode before Fuzzy operation is operated.

1) Fuzzy Operation for Cooling

- According to the setting temperature selected by Fuzzy rule, when the intake air temp is 0.5°C(33°F) or more below the setting temp, the compressor is turned off. When 0.5°C(33°F) or more above the setting temp, the compressor is turned on.

Compressor ON Temp => Setting Temp+0.5°C(33°F)

Compressor OFF Temp => Setting Temp+0.5°C(33°F)

- At the beginning of Fuzzy mode operation, the setting temperature is automatically selected according to the intake air temp at that time.

26°C(78°F) ≤ Intake Air Temp => 25°C(76°F)

24°C(76°F) ≤ Intake Air Temp<26°C(78°F) => Intake Air Temp+1°C(34°F)

22°C(72°F) ≤ Intake Air Temp<24°C(76°F) => Intake Air Temp+0.5°C(33°F)

18°C(64°F) ≤ Intake Air Temp<22°C(72°F)=> Intake Air Temp

Intake Air Temp < 18°C(64°F) => 18°C(64°F)

- When the Fuzzy key (Temperature Control key) is input after the initial setting temperature is selected, the Fuzzy key value and the intake air temperature at that time are compared to select the setting temperature automatically according to the Fuzzy rule.
- While in Fuzzy operation, the airflow speed of the indoor fan is automatically selected according to the temperature.

2) Fuzzy Operation for Dehumidification

- According to the setting temperature selected by Fuzzy rule, when the intake air temp is 0.5°C(33°F) or more below the setting temp, the compressor is turned off. When 0.5°C(33°F) or more above the setting temp, the compressor is turned on.

Compressor ON Temp => Setting Temp+0.5°C(33°F)

Compressor OFF Temp => Setting Temp+0.5°C(33°F)

Copyright ©2010 LG Electronics. Inc. All right reserved.
Only for training and service purposes

LGE Internal Use Only

- At the beginning of Fuzzy mode operation, the setting temperature is automatically selected according to the intake air temp at that time.

  26°C(78°F) ≤ Intake Air Temp => 25°C(76°F)

  24°C(76°F) ≤ Intake Air Temp<26°C(78°F) => Intake Air Temp+1°C(34°F)

  22°C(72°F) ≤ Intake Air Temp<24°C(76°F) => Intake Air Temp+0.5°C(33°F)

  18°C(64°F) ≤ Intake Air Temp<22°C(72°F) => Intake Air Temp

  Intake Air Temp < 18°C(64°F) => 18°C(64°F)
- When the Fuzzy key (Temperature Control key) is input after the initial setting temperature is selected, the Fuzzy key value and the intake air temperature at that time are compared to select the setting temperature automatically according to the Fuzzy rule.
- While in Fuzzy operation, the airflow speed of the indoor fan repeats the low airflow speed or pause as in dehumidification operation.

3) Fuzzy Operation for Heating

- According to the setting temperature selected by Fuzzy rule, when the intake air temp is 3°C(37°F) or more above the setting temp, the compressor is turned off. When below the setting temp, the compressor is turned on.

  Compressor ON Temp => Setting Temp. +2°C(36°F)
  Compressor OFF Temp => Setting Temp. +4°C(39°F)
- At the beginning of Fuzzy mode operation, the setting temperature is automatically selected according to the intake air temp at that time.
  20°C(68°F) ≤ Intake Air Temp => Intake Air Temp + 0.5°C(33°F)
  Intake Air Temp < 20°C(68°F) => 20°C(68°F)

- When the Fuzzy key (Temperature Control key) is input after the initial setting temperature is selected, the Fuzzy key value and the intake air temperature at that time are compared to select the setting temperature automatically according to the Fuzzy rule.
- While in Fuzzy operation, the airflow speed of the indoor fan is set to the high or the medium according to the intake air temperature and the setting temperature.

■ Airflow Speed Selection

- The airflow speed of the indoor fan is set to high, medium, low, or chaos by the input of the airflow speed selection key on the remote controller.

■ On-Timer Operation

- When the set time is reached after the time is input by the remote controller, the appliance starts to operate.
- The timer LED is on when the on-timer is input. It is off when the time set by the timer is reached.
- If the appliance is operating at the time set by the timer, the operation continues.

■ Off-Timer Operation

- When the set time is reached after the time is input by the remote controller, the appliance stops operating.
- The timer LED is on when the off-timer is input. It is off when the time set by the timer is reached.
- If the appliance is on pause at the time set by the timer, the pause continues.

Copyright ©2010 LG Electronics. Inc. All right reserved.
Only for training and service purposes

LGE Internal Use Only

■ Off-Timer <=> On-Timer Operation

- When the set time is reached after the on/off time is input by the remote controller, the on/off-timer operation is carried out according to the set time.

■ Sleep Timer Operation

- When the sleep time is reached after <1,2,3,4,5,6,7,0(cancel) hr> is input by the remote controller while in appliance operation, the operation of the appliance stops.
- While the appliance is on pause, the sleep timer mode cannot be input.
- While in cooling mode operation, 30 min later since the start of the sleep timer, the setting temperature increases by 1°C(34°F) After another 30 min elapse, it increases by 1°C(34°F) again.
- When the sleep timer mode is input while in cooling cycle mode, the airflow speed of the indoor fan is set to the low.
- When the sleep timer mode is input while in heating cycle mode, the airflow speed of the indoor fan is set to the medium.

■ Chaos Swing Mode

- By the Chaos Swing key input, the vane automatically operates with the Chaos Swing or they are fixed to the desired direction.

■ Chaos Natural Wind Mode

- When the Chaos Natural Wind mode is selected and then operated, the high, medium, or low speed of the air-flow mode is operated for 2~15 sec randomly by the Chaos Simulation."

■ Jet Cool Mode Operation (Outdoor unit C/O Model)

- If the Jet Cool key is input at any operation mode while in appliance operation, the Jet Cool mode operates.
- In the Jet Cool mode, the indoor fan is operated at super-high speed for 30 min at cooling mode operation.
- In the Jet Cool mode operation, the room temperature is controlled to the setting temperature, 18°C(64°F)
- When the sleep timer mode is input while in the Jet Cool mode operation, the Jet Cool mode has the priority.
- During the JET COOL function at any moment, the A/C starts to blow the cool air with side louvers closed at extremely high speed for 30 minutes setting the room temp. automatically to 18°C.

■ Jet Cool Mode Operation (Outdoor unit H/P Model)

- While in heating mode or Fuzzy operation, the Jet Cool key cannot be input. When it is input while in the other mode operation (cooling, dehumidification, ventilation), the Jet Cool mode is operated."
- In the Jet Cool mode, the indoor fan is operated at super-high speed for 30 min at cooling mode operation.
- In the Jet Cool mode operation, the room temperature is controlled to the setting temperature, 18°C(64°F)
- When the sleep timer mode is input while in the Jet Cool mode operation, the Jet Cool mode has the priority.
- During the JET HEAT function at any moment, the A/C starts to blow the hot air with side louvers closed at extremely high speed for 60 minutes setting the room temp. automatically to 30°C(86°F).

■ Auto Restarting Operation

- When the power is restored after a sudden power failure while in appliance operation, the mode before the power failure is kept on the memory and the appliance automatically operates in the mode on the memory.
- Operation Mode that is kept on the memory
  - State of Operation ON/OFF

Copyright ©2010 LG Electronics. Inc. All right reserved.
Only for training and service purposes

LGE Internal Use Only

- Operation Mode/Setting Temp/Selected Airflow Speed
- Sleep Timer Mode/Remaining Time of Sleep Timer (unit of hour)

■ Forced Operation

• Operation procedures when the remote control can't be used.
• The operation will be started if the power button is pressed.
• If you want to stop operation, re-press the button.

	Cooling Model	Heat pump Model		
		Room Temp. ≥ 24°C(76°F)	21°C(70°F) ≤ Room Temp. < 24°C(76°F)	Room Temp. < 21°C(70°F)
Operating mode	Cooling	Cooling	Healthy Dehumidification	Heating
Indoor Fan Speed	High	High	High	High
Setting Temperature	22°C(72°F)	22°CC(72°F)	23°C(74°F)	24°C(76°F)

• While in forced operation, the key input by the remote control has no effect and the buzzer sounds 10 times to indicate the forced operation.

■ Test operation

• During the TEST OPERATION, the unit operates in cooling mode at high speed fan, regardless of room temperature and resets in 18±1 minutes.
• During test operation, if remote controller signal is received, the unit operates as remote controller sets.
If you want to use this operation, Press and hold ON/OFF button 3~5 seconds, then the buzzer sound 1 "beep".
• If you want to stop the operation, re-press the button.

■ Protection of the evaporator pipe from frosting

• If the indoor pipe temp is below 0°C(32F) in 7 min. after the compressor operates without any pause while in cooling cycle operation mode, the compressor and the outdoor fan are turned off in order to protect the indoor evaporator pipe from frosting.
• When the indoor pipe temp is 7°C(45°F) or higher after 3 min. pause of the compressor, the compressor and the outdoor fan is turned on according to the condition of the room temperature.

■ Buzzer Sounding Operation

• When the appliance-operation key is input by the remote control, the short "beep-beep-" sounds.
• When the appliance-pause key is input by the remote control, the long "beep—" sounds.
• When a key is input by the remote control while the slide switch on the main unit of the appliance is on the forced operation position, the error sound "beep-beep-beep-beep-beep-" is made 10 times to indicate that the remote control signal cannot be received.

Copyright ©2010 LG Electronics. Inc. All right reserved.
Only for training and service purposes

LGE Internal Use Only

■ Air Cleaner Operation

- When an air cleaner function is selected during Air Conditioner operation
  - Plasma air cleaner function will be operated while in any operation mode with selecting the function.
  - The function is to be stopped while it is operating with selecting the function.
- When an air cleaner function is selected during operation off
  - The function will be only operated.
- When inlet grille of air conditioner is opened during plasma operation, High Voltage Generator(H.V.B) is to be stopped. When inlet grille of air conditioner is closed during plasma operation, High Voltage Generator(H.V.B) will be operated again.

Copyright ©2010 LG Electronics. Inc. All right reserved.
Only for training and service purposes

LGE Internal Use Only

3. Dimensions

Wall Mounted
ARNU07GSE*2 ARNU09GSE*2 ARNU12GSE*2 ARNU15GSE*2

(unit : mm)

Model	W	H	D
ARNU07GSE*2 ARNU09GSE*2 ARNU12GSE*2 ARNU15GSE*2	895	282	165

(unit : mm)

Number	Name	Description
1	Front panel	
2	Air discharge	
3	Air suction	
4	Liquid pipe	Ø6.35 Flare connection
5	Gas pipe	Ø12.7 Flare connection
6	Drain pipe	External dia. Ø17
7	Right side piping/wiring connection	
8	Left side piping/wiring connection	

▣ Note

1. Unit should be installed in compliance with the installation manual in the product box.
2. Unit shall be grounded in accordance with the local regulations or applicable national codes.

※ Required space(unit:mm)

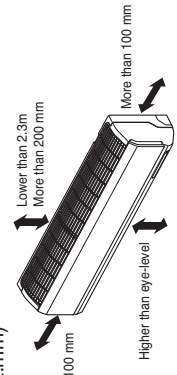

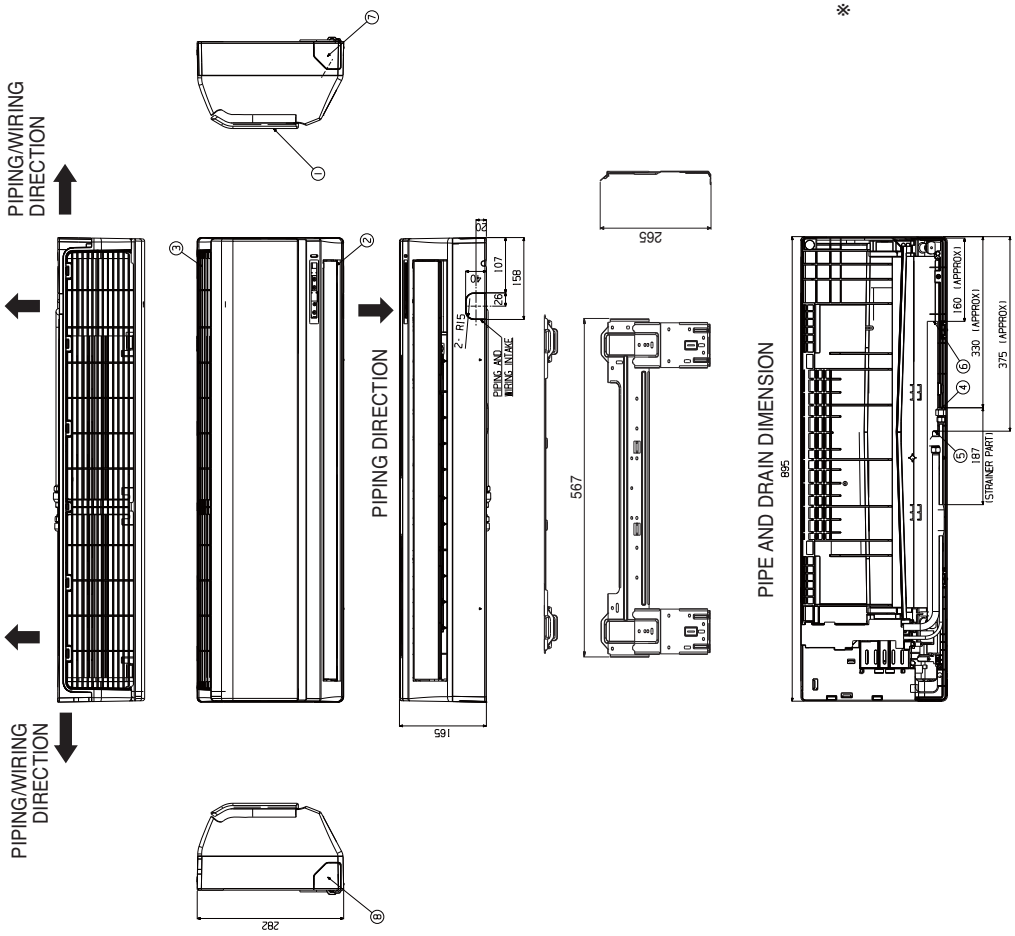

76, Seongsan-dong, Changwon City, Gyeongnam, 641-713, Korea

CHASSIS CODE: SE

LG Electronics

Copyright ©2010 LG Electronics. Inc. All right reserved.
Only for training and service purposes

LGE Internal Use Only

Wall Mounted

ARNU18GS5*2
ARNU24GS5*2

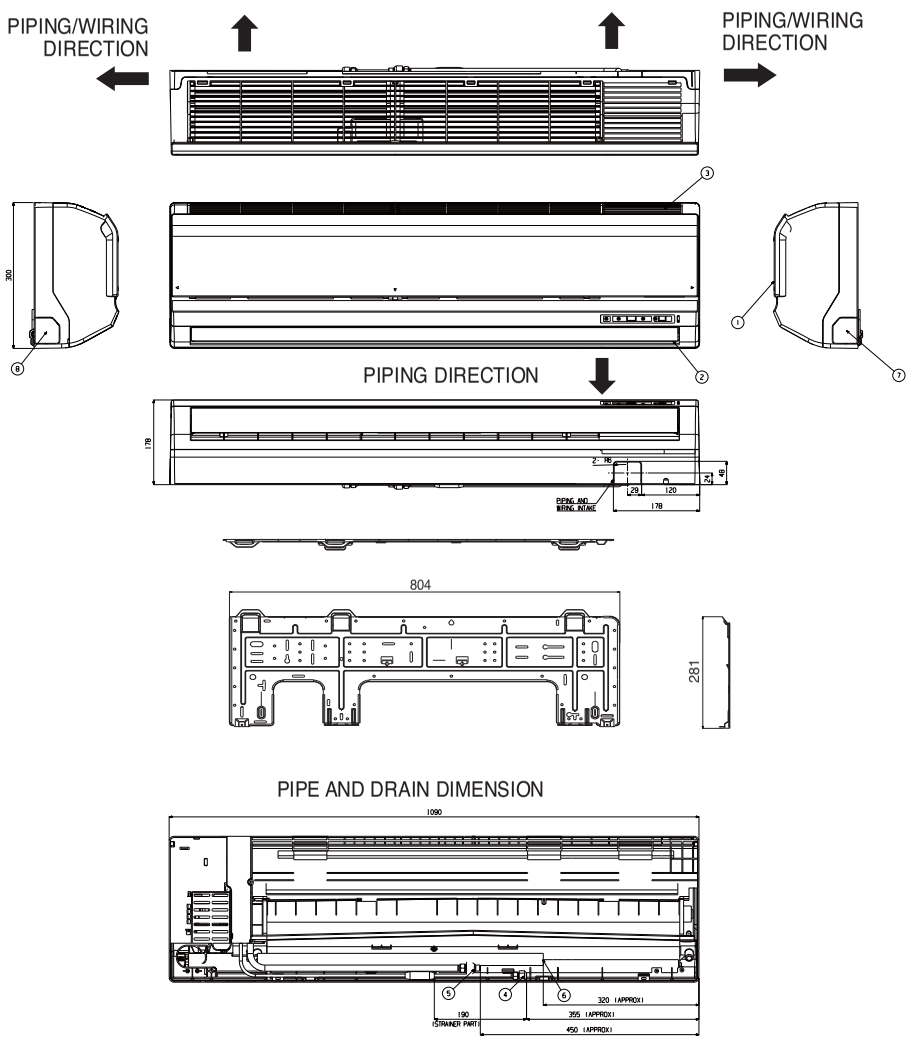

(unit : mm)

Model	W	H	D
ARNU18GS5*2 ARNU24GS5*2	1090	300	178

(unit : mm)

Number	Name	Descripition
1	Front panel	
2	Air discharge	
3	Air suction	
4	Liquid pipe	Ø6.35 Flare connection
5	Gas pipe	Ø12.7 Flare connection
6	Drain pipe	External dia. Ø17
7	Right side piping/wiring connection	
8	Left side piping/wiring connection	

■ Note

1. Unit should be installed in compliance with the installation manual in the product box.
2. Unit shall be grounded in accordance with the local regulations or applicable national codes.

※ Required space(unit:mm)

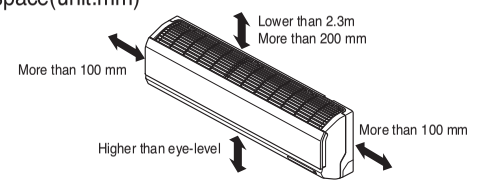

LG Electronics

76, Seongsan-dong, Changwon City, Gyeongnam, 641-713, Korea

CHASSIS CODE: S5

Copyright ©2010 LG Electronics. Inc. All right reserved.
Only for training and service purposes

LGE Internal Use Only

Ceiling & Floor
Ceiling Suspended

1. Funtions 88
2. Operation Details.....89
3. Dimensions 92

Copyright ©2010 LG Electronics. Inc. All right reserved.
Only for training and service purposes

LGE Internal Use Only

1. Function

Indoor Unit

- **Operation ON/OFF by Remote controller**
- **Sensing the Room Temperature**
  - Room temperature sensor. (Thermistor)
- **Room temperature control**
  - Maintains the room temperature in accordance with the Setting Temperature.
- **Starting Current Control**
  - Indoor fan is delayed for 5 seconds at the starting.
- **Indoor Fan Speed Control**
  - High, Med, Low
- **Soft Dry Operation Mode**
  - Intermittent operation of fan at low speed.
- **Auto Restart**
  - Although the air-conditioner is turned off by a power failure, it is restarted automatically previous operation mode after power supply.
- **Deice (defrost) control (Heating)**
  - Both the indoor and outdoor fan stops during defrosting.
  - Hot start after defrost ends.
- **Hot-start Control (Heating)**
  - The indoor fan does not rotate until the evaporator piping temperature reaches 25°C(76°F).
- **High head height Drain pump**
  - A standard drain-head height of up to 700mm(27-9/16inch) is possible.
- **Central Control(Optional)**
  - It is operating individually or totally by central control function.

Copyright ©2010 LG Electronics. Inc. All right reserved.
Only for training and service purposes

LGE Internal Use Only

2. Operation Details

(1) The function of main control

■ Soft-Dry Operation

• The indoor fan speed is automatically set to the low, so the shift of the indoor fan speed is impossible because of already being set to the best speed for Dry Operation by microcontroller control.

■ Cooling Mode Operation

• When selecting the Cooling(❄) Mode Operation, the unit will operate according to the setting by the remote controller and the operation diagram is as following.

INDOOR FAN	Selecting fan speed	Low	Selecting fan speed	Low	Selecting fan speed
COMPRESSOR	ON	OFF	ON	OFF	ON

	Thermal ON	Thermal OFF
Indoor Unit mode	ST+0.5	ST-0.5
2TH (Remo.+Indoor)	To be selected higher temperature contrast Indoor Unit and Remo.	To be selected higher temperature contrast Indoor Unit and Remo.
Remo. Mode	ST+0.5	ST-0.5

Copyright ©2010 LG Electronics. Inc. All right reserved.
Only for training and service purposes

LGE Internal Use Only

■ Heating Mode Operation

The unit will operate according to the setting by the remote controller and the operation diagram is shown as following.

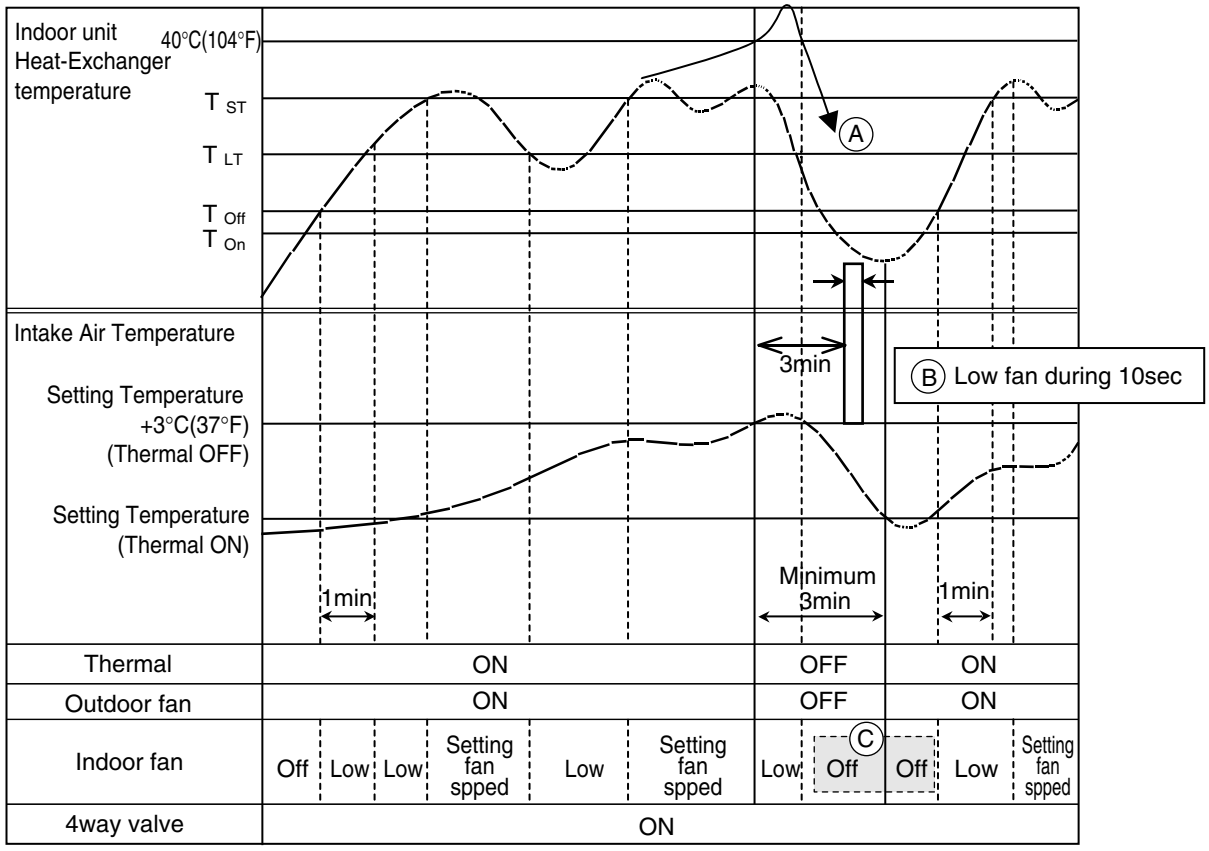

- **Compressor-off interval** : - Ⓐ While the indoor Heat-Exchanger temperature is higher than 40°C(104°F), fan operates at low speed, when it becomes lower than 40°C(104°F) fan stops.
  - Ⓑ For eluminating latent heat-loss, fan operates at low speed for 10 seconds periodically.
  - Ⓒ To be operated "Low" except initial Hotstart operation

	High Static			Low Static				Convertible	
Chassis	BH	BG	BR	B1	B2	CE	CF	VE	VJ
Hotstart On T_{On}	19°C(66°F)	19°C(66°F)	19°C(66°F)	19°C(66°F)	19°C(66°F)	19°C(66°F)	19°C(66°F)	26°C(78°F)	26°C(78°F)
Hotstart Off T_{Off}	22°C(72°F)	22°C(72°F)	22°C(72°F)	22°C(72°F)	22°C(72°F)	22°C(72°F)	22°C(72°F)	27°C(80°F)	27°C(80°F)
Low temperature T_{LT}	25°C(76°F)	25°C(76°F)	25°C(76°F)	25°C(76°F)	25°C(76°F)	25°C(76°F)	25°C(76°F)	28°C(82°F)	28°C(82°F)
Setting Temperature T_{ST}	27°C(80°F)	27°C(80°F)	27°C(80°F)	27°C(80°F)	27°C(80°F)	27°C(80°F)	27°C(80°F)	30°C(86°F)	30°C(86°F)

Copyright ©2010 LG Electronics. Inc. All right reserved.
Only for training and service purposes

LGE Internal Use Only

■ Hot-Start Control

• The indoor fan does not rotate until the indoor unit Hex-Exchanger temperature reaches 30°C(86°F).

• The operation diagram is as following.

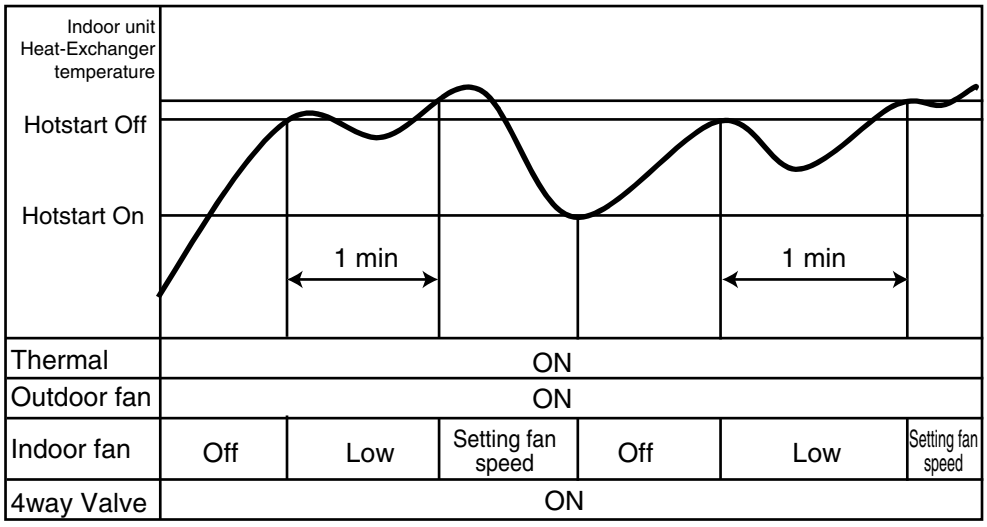

• Initial Hotstart On state

① Power Off ➠ On
② Operation Off ➠ On
③ Cooling operation ➠ Heating operation
④ Defrost operation

Copyright ©2010 LG Electronics. Inc. All right reserved.
Only for training and service purposes

LGE Internal Use Only

3. Dimensions

Ceiling & Floor

ARNU09GVEA2
ARNU12GVEA2

(unit : mm)

Model	W	H	D
ARNU09GVEA2 ARNU12GVEA2	900	490	200

(unit : mm)

Number	Name	Description
1	Liquid pipe	ø6.35 Flare connection
2	Gas pipe	ø12.7 Flare connection
3	Suction gille	
4	Discharge grille	
5	Suspension bracket	
6	Right side drain hose hole	
7	Left side drain hose hole	
8	Wiring connection	Slit hole
9	Piping connection	Slit hole
10	Signal receiver & Operation indicator	

▣ Note
1. Unit should be installed in compliance with the installation manual in the product box.
2. Unit shall be grounded in accordance with the local regulations or applicable national codes.

※ Required space(unit:mm)

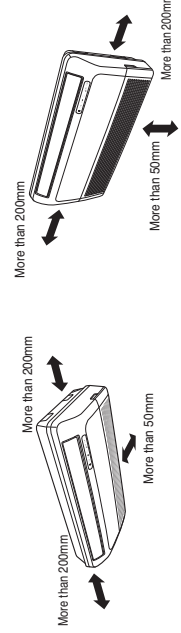

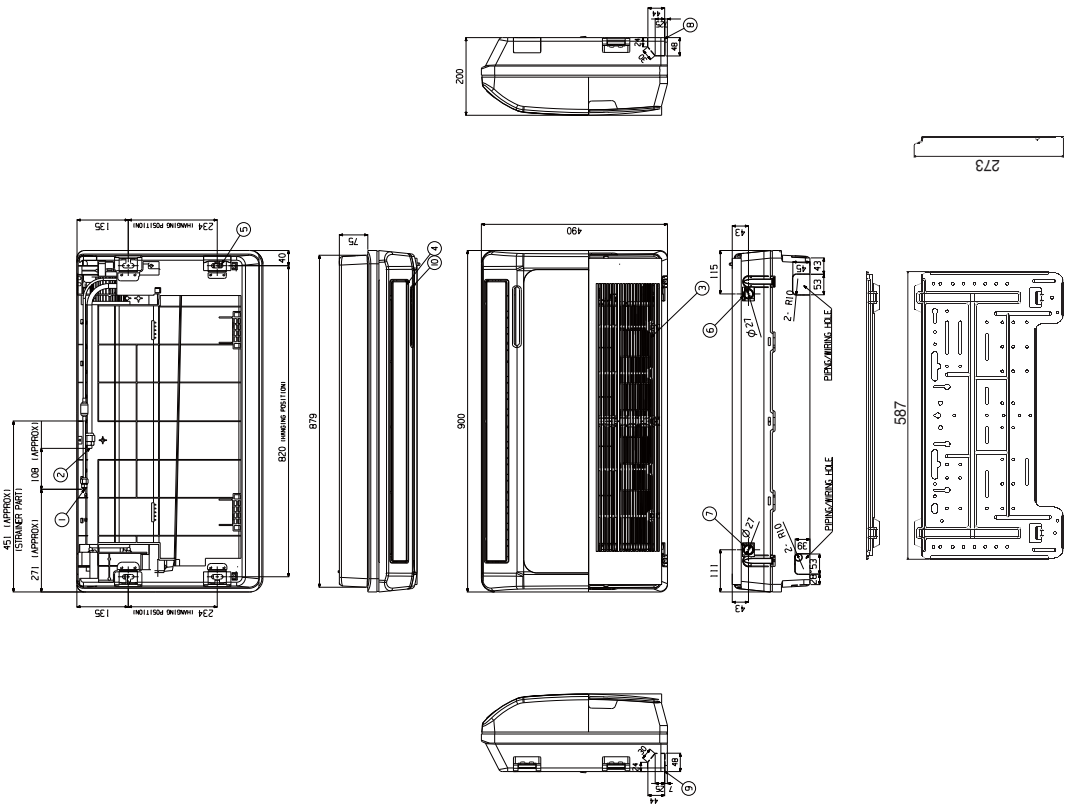

CHASSIS CODE: VE

76, Seongsan-dong, Changwon City, Gyeongnam, 641-713, Korea

LG Electronics

Copyright ©2010 LG Electronics. Inc. All right reserved.
Only for training and service purposes

LGE Internal Use Only

Ceiling Suspended

ARNU18GVJA2
ARNU24GVJA2

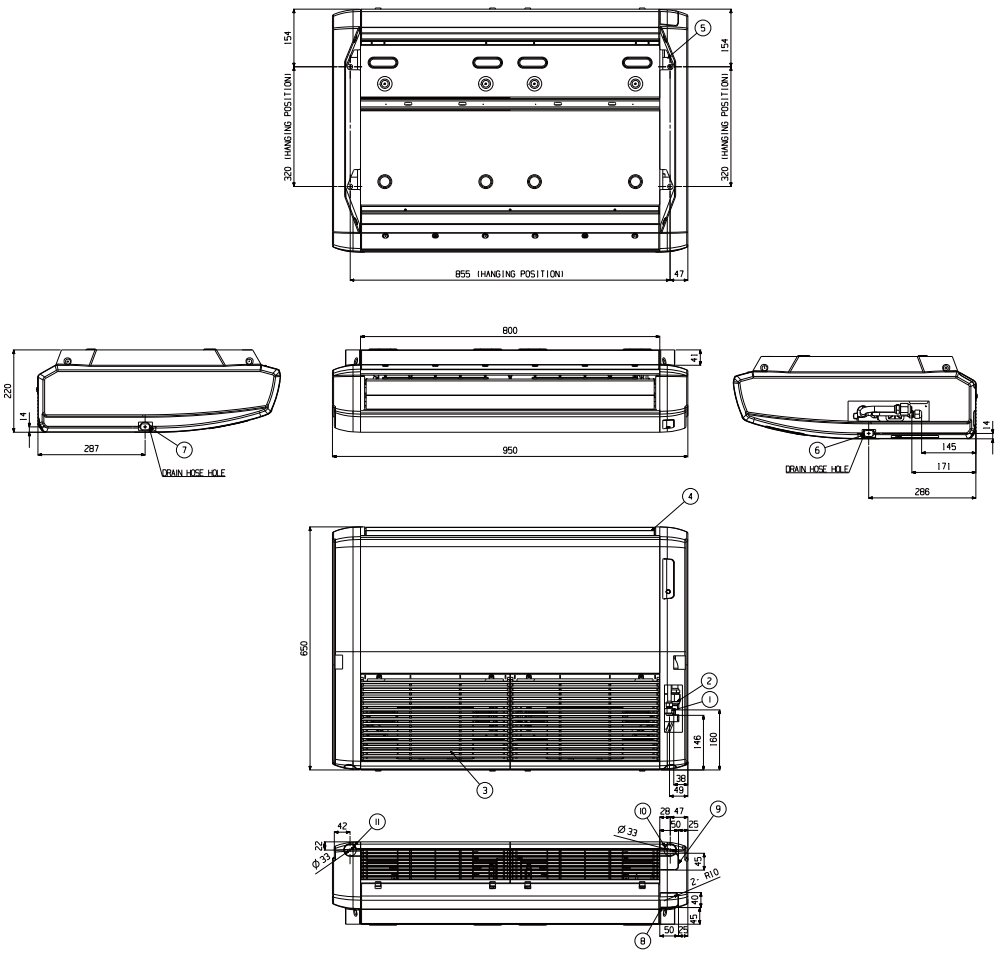

(unit : mm)

Model	W	H	D
ARNU18GVJA2 ARNU24GVJA2	950	650	220

(unit : mm)

Number	Name	Descripition
1	Liquid pipe	ø6.35 Flare connection
2	Gas pipe	ø12.7 Flare connection
3	Suction gille	
4	Discharge grille	
5	Suspension bracket	
6	Right side drain hose hole	
7	Left side drain hose hole	
8	Wiring connection	Slit hole
9	Piping connection	Slit hole
10	Right side drain pipe connection	Slit hole
11	Left side drain pipe connection	Slit hole

▣ Note

1. Unit should be installed in compliance with the installation manual in the product box.
2. Unit shall be grounded in accordance with the local regulations or applicable national codes.

※ Required space(unit:mm)

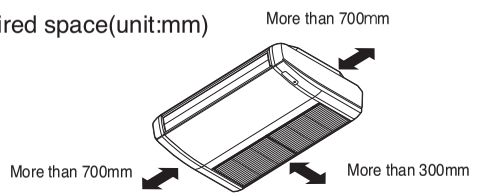

LG Electronics

76, Seongsan-dong, Changwon City, Gyeongnam, 641-713, Korea

CHASSIS CODE: VJ

Copyright ©2010 LG Electronics. Inc. All right reserved.
Only for training and service purposes

LGE Internal Use Only

Floor Standing Type

1. Function 95
2. Operation Details.....96
3. Dimensions 99

Copyright ©2010 LG Electronics. Inc. All right reserved.
Only for training and service purposes

LGE Internal Use Only

1. Function

Indoor Unit

- **Operation ON/OFF by Remote controller**
- **Sensing the Room Temperature** • Room temperature sensor. (Thermistor)
- **Room temperature control** • Maintains the room temperature in accordance with the Setting Temperature.
- **Starting Current Control** • Indoor fan is delayed for 5 seconds at the starting.
- **Indoor Fan Speed Control** • High, Med, Low
- **Soft Dry Operation Mode** • Intermittent operation of fan at low speed.
- **Auto Restart** • Although the air-conditioner is turned off by a power failure, it is restarted automatically previous operation mode after power supply.
- **Deice (defrost) control (Heating)** • Both the indoor and outdoor fan stops during defrosting. • Hot start after defrost ends.
- **Hot-start Control (Heating)** • The indoor fan does not rotate until the evaporator piping temperature reaches 25°C(76°F).
- **High head height Drain pump** • A standard drain-head height of up to 700mm(27-9/16inch) is possible.
- **Central Control(Optional)** • It is operating individually or totally by central control function.

Copyright ©2010 LG Electronics. Inc. All right reserved.
Only for training and service purposes

LGE Internal Use Only

2. Operation Details

(1) The function of main control

■ Soft-Dry Operation

• The indoor fan speed is automatically set to the low, so the shift of the indoor fan speed is impossible because of already being set to the best speed for Dry Operation by microcontroller control.

■ Cooling Mode Operation

• When selecting the Cooling(❄) Mode Operation, the unit will operate according to the setting by the remote controller and the operation diagram is as following.

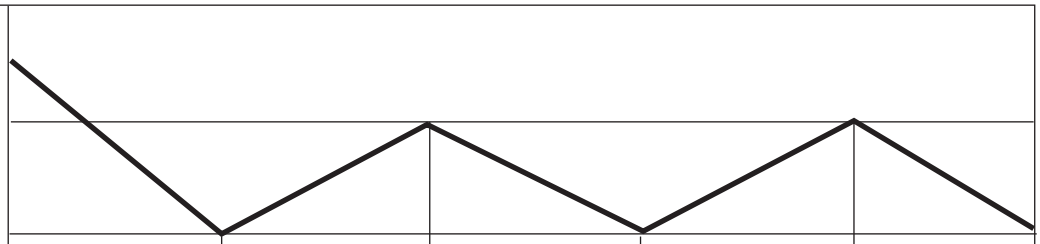

INDOOR FAN	Selecting fan speed	Low	Selecting fan speed	Low	Selecting fan speed
COMPRESSOR	ON	OFF	ON	OFF	ON

	Thermal ON	Thermal OFF
Indoor Unit mode	ST+0.5	ST-0.5
2TH (Remo.+Indoor)	To be selected higher temperature contrast Indoor Unit and Remo.	To be selected higher temperature contrast Indoor Unit and Remo.
Remo. Mode	ST+0.5	ST-0.5

Copyright ©2010 LG Electronics. Inc. All right reserved.
Only for training and service purposes

LGE Internal Use Only

■ Heating Mode Operation

The unit will operate according to the setting by the remote controller and the operation diagram is shown as following.

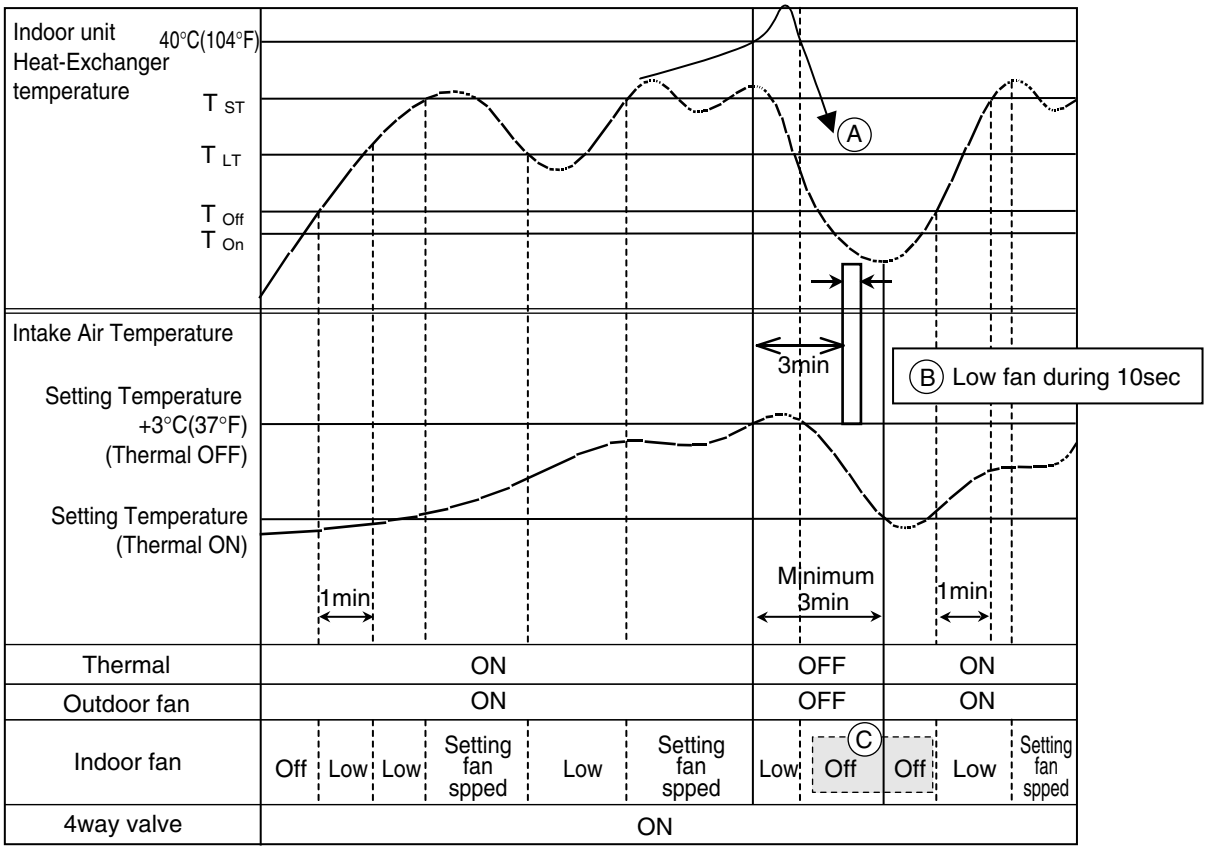

• **Compressor-off interval** : - (A) While the indoor Heat-Exchanger temperature is higher than 40°C(104°F), fan operates at low speed, when it becomes lower than 40°C(104°F) fan stops.
- (B) For eluminating latent heat-loss, fan operates at low speed for 10 seconds periodically.
- (C) To be operated "Low" except initial Hotstart operation

	High Static			Low Static				Convertible	
Chassis	BH	BG	BR	B1	B2	CE	CF	VE	VJ
Hotstart On T_{On}	19°C(66°F)	19°C(66°F)	19°C(66°F)	19°C(66°F)	19°C(66°F)	19°C(66°F)	19°C(66°F)	26°C(78°F)	26°C(78°F)
Hotstart Off T_{Off}	22°C(72°F)	22°C(72°F)	22°C(72°F)	22°C(72°F)	22°C(72°F)	22°C(72°F)	22°C(72°F)	27°C(80°F)	27°C(80°F)
Low temperature T_{LT}	25°C(76°F)	25°C(76°F)	25°C(76°F)	25°C(76°F)	25°C(76°F)	25°C(76°F)	25°C(76°F)	28°C(82°F)	28°C(82°F)
Setting Temperature T_{ST}	27°C(80°F)	27°C(80°F)	27°C(80°F)	27°C(80°F)	27°C(80°F)	27°C(80°F)	27°C(80°F)	30°C(86°F)	30°C(86°F)

Copyright ©2010 LG Electronics. Inc. All right reserved.
Only for training and service purposes

LGE Internal Use Only

■ Hot-Start Control

• The indoor fan does not rotate until the indoor unit Hex-Exchanger temperature reaches 30°C(86°F).

• The operation diagram is as following.

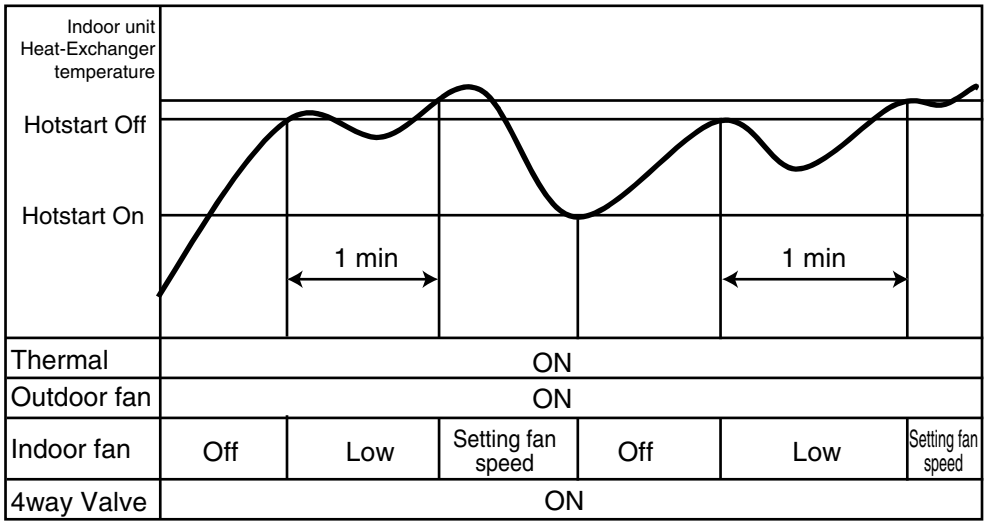

• Initial Hotstart On state

① Power Off ➠ On
② Operation Off ➠ On
③ Cooling operation ➠ Heating operation
④ Defrost operation

Copyright ©2010 LG Electronics. Inc. All right reserved.
Only for training and service purposes

LGE Internal Use Only

3. Dimensions

Floor Standing	
ARNU073CEA2	ARNU073CEU2
ARNU093CEA2	ARNU093CEU2
ARNU123CEA2	ARNU123CEU2
ARNU153CEA2	ARNU153CEU2

[Unit : mm(inch)]

Model	W	H	D
ARNU073CEA2 ARNU093CEA2 ARNU123CEA2 ARNU153CEA2	1067 (42)	635 (25)	203 (7-15/16)
ARNU073CEU2 ARNU093CEU2 ARNU123CEU2 ARNU153CEU2	978 (38-1/2)	639 (31-1/4)	190 (7-7/16)

[Unit : mm(inch)]

Number	Name	Description
1	Air discharge grill	
2	Air suction grill	

▣ Note

1. Unit should be installed in compliance with the installation manual in the product box.
2. Unit shall be grounded in accordance with the local regulations or applicable national codes.

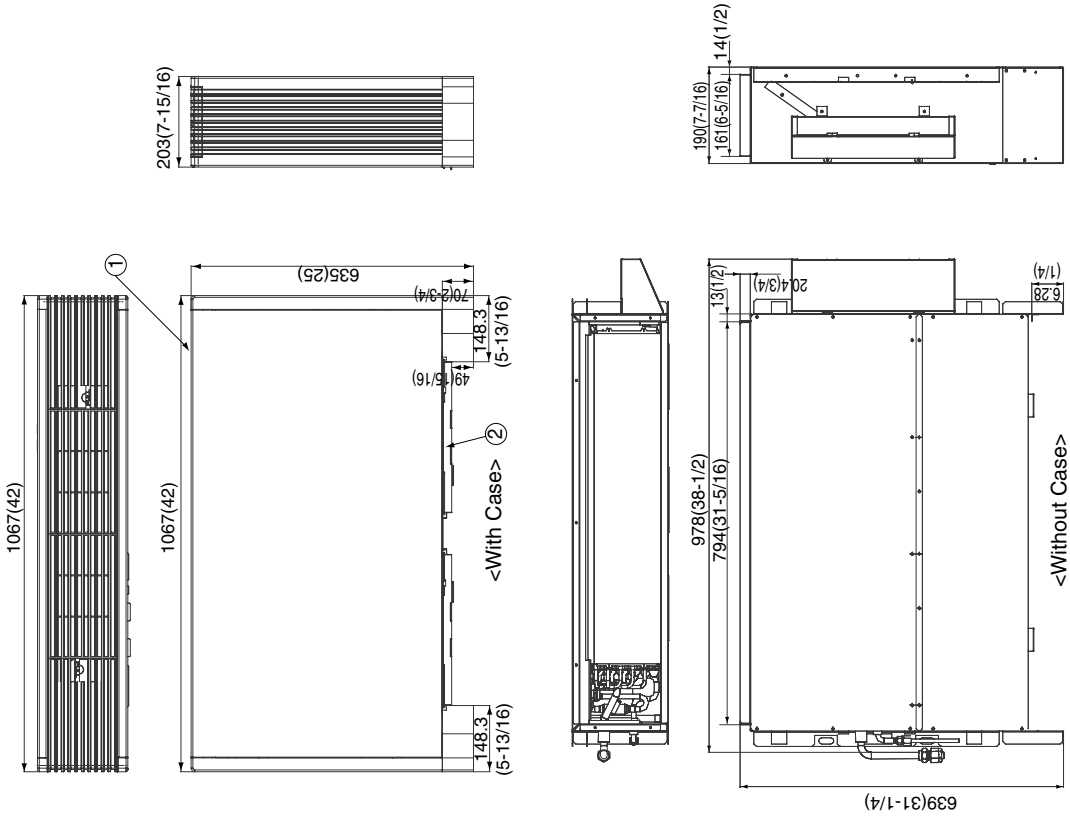

LG Electronics

LG Electronics USA, HVAC Division
1000 Sylvan Avenue, Englewood Cliffs, NJ 07632
www.lgusa.com / www.lghvac.com

76, Seongsan-dong, Changwon City, Gyeongnam,
641-713, Korea
www.lgeaircon.com

CHASSIS CODE: CE

Copyright ©2010 LG Electronics. Inc. All right reserved.
Only for training and service purposes

LGE Internal Use Only

Floor Standing

ARNU183CFA2 ARNU183CFU2
ARNU243CFA2 ARNU243CFU2

[Unit : mm(inch)]

Model	W	H	D
ARNU183CFA2 ARNU243CFA2	1345 (52-15/16)	635 (25)	203 (7-15/16)
ARNU183CFU2 ARNU243CFU2	1256 (49-7/16)	639 (31-1/4)	190 (7-7/16)

(unit : mm)

Number	Name	Description
1	Air discharge grill	
2	Air suction grill	

▣ Note

1. Unit should be installed in compliance with the installation manual in the product box.
2. Unit shall be grounded in accordance with the local regulations or applicable national codes.

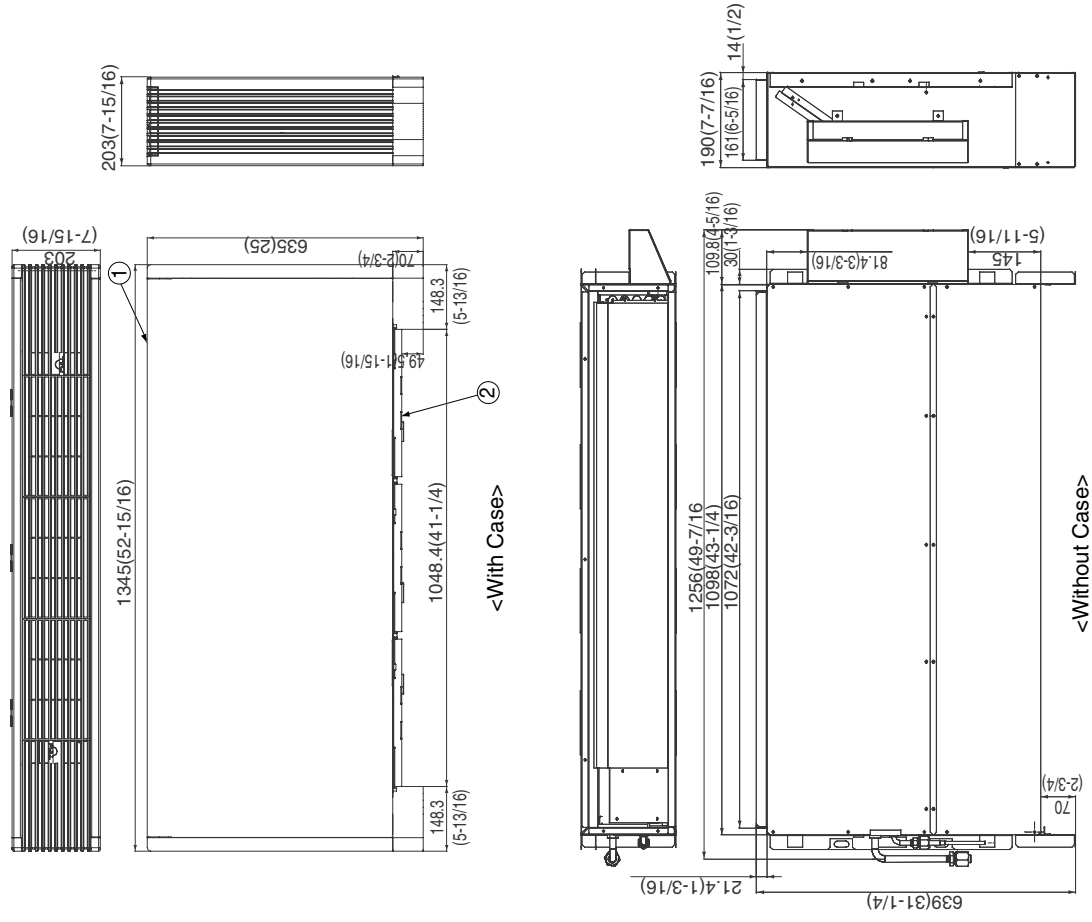

CHASSIS CODE: CF

LG Electronics

LG Electronics USA, HVAC Division
1000 Sylvan Avenue, Englewood Cliffs, NJ 07632
www.lgusa.com / www.lghvac.com

76, Seongsan-dong, Changwon City, Gyeongnam,
641-713, Korea
www.lgeaircon.com

Copyright ©2010 LG Electronics. Inc. All right reserved.
Only for training and service purposes

LGE Internal Use Only

Vertical Air Handling Unit

1. Funtions 102
2. Operation Details.....103
3. Dimensions 107

Copyright ©2010 LG Electronics. Inc. All right reserved.
Only for training and service purposes

LGE Internal Use Only

1. Funtions

Indoor Unit

Operation ON/OFF by Remote controller

Sensing the Room Temperature
- Room temperature sensor. (Thermistor)

Room temperature control
- Maintains the room temperature in accordance with the Setting Temperature.

Starting Current Control
- Indoor fan is delayed for 5 seconds at the starting.

Indoor Fan Speed Control
- High, Med, Low

Soft Dry Operation Mode
- Intermittent operation of fan at low speed.

Auto Restart
- Although the air-conditioner is turned off by a power failure, it is restarted automatically previous operation mode after power supply.

Deice (defrost) control (Heating)
- Both the indoor and outdoor fan stops during defrosting.
- Hot start after defrost ends.
- If the electric heater has been installed, indoor fan continuous will be.

Hot-start Control (Heating)
- The indoor fan does not rotate until the evaporator piping temperature reaches 25°C(76°F)

Central Control(Optional)
- It is operating individually or totally by central control function.

Copyright ©2010 LG Electronics. Inc. All right reserved.
Only for training and service purposes

LGE Internal Use Only

2. Operation Details

(1) The function of main control

■ Soft-Dry Operation

• The indoor fan speed is automatically set to the low, so the shift of the indoor fan speed is impossible because of already being set to the best speed for Dry Operation by microcontroller control.

■ Cooling Mode Operation

• When selecting the Cooling(❄) Mode Operation, the unit will operate according to the setting by the remote controller and the operation diagram is as following.

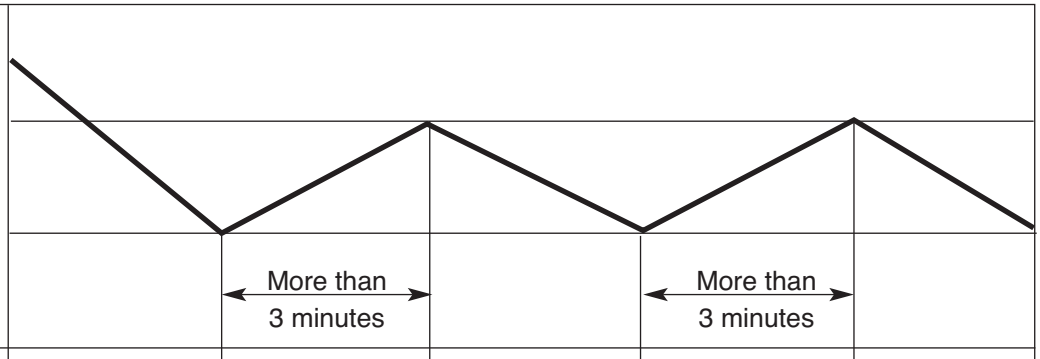

INDOOR FAN	Selecting fan speed	Low	Selecting fan speed	Low	Selecting fan speed
COMPRESSOR	ON	OFF	ON	OFF	ON

Copyright ©2010 LG Electronics. Inc. All right reserved.
Only for training and service purposes

LGE Internal Use Only

■ Heating Mode Operation

The unit will operate according to the setting by the remote controller and the operation diagram is shown as following.

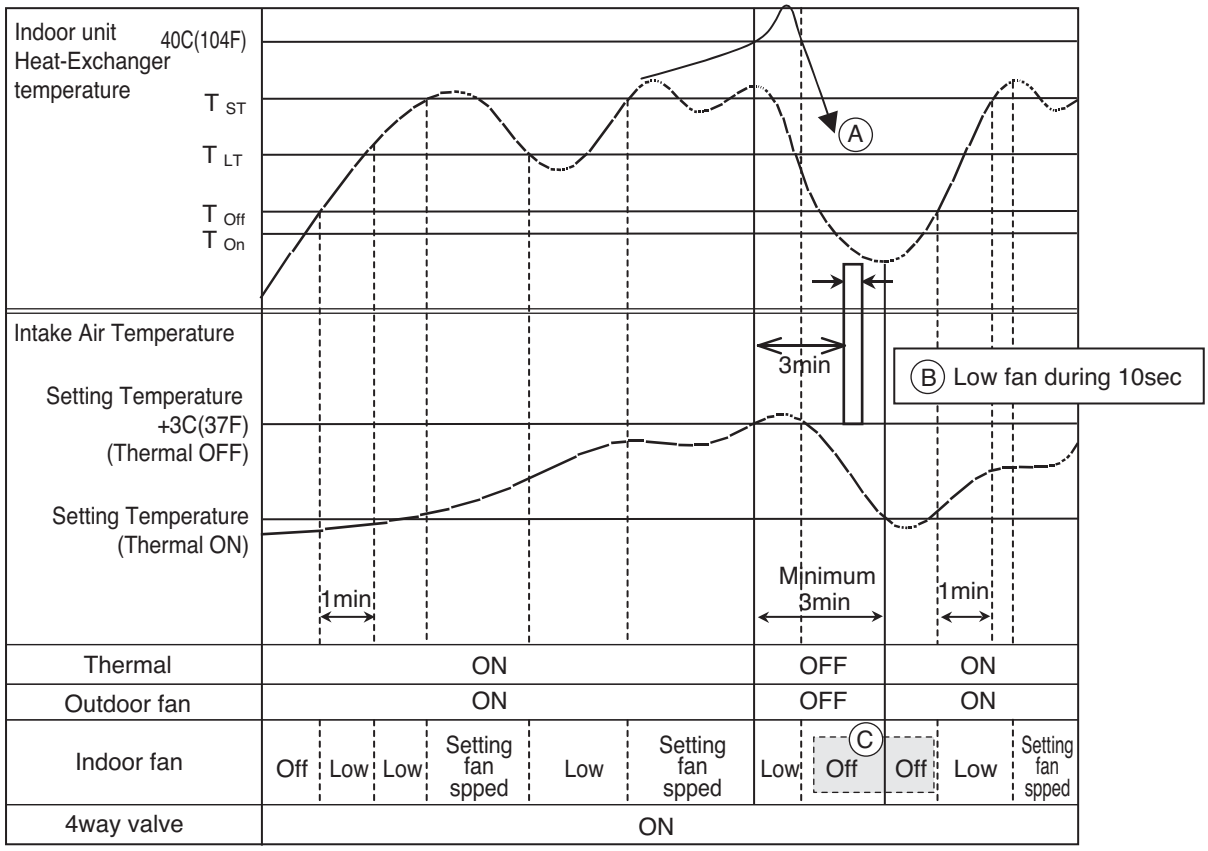

• **Compressor-off interval** : - Ⓐ While the indoor Heat-Exchanger temperature is higher than 40C(104F), fan operates at low speed, when it becomes lower than 40C(104F) fan stops.
- Ⓑ For eluminating latent heat-loss, fan operates at low speed for 10 seconds periodically.
- Ⓒ To be operated "Low" except initial Hotstart operation

	Vertical Air Handling Unit	
Chassis	NJ	NK
Hotstart On T_{On}	19°C(66°F)	19°C(66°F)
Hotstart Off T_{Off}	22°C(72°F)	22°C(72°F)
Low temperature T_{LT}	25°C(76°F)	25°C(76°F)
Setting Temperature T_{ST}	27°C(80°F)	27°C(80°F)

Copyright ©2010 LG Electronics. Inc. All right reserved.
Only for training and service purposes

LGE Internal Use Only

■ Hot-Start Control

• The indoor fan does not rotate until the indoor unit Hex-Exchanger temperature reaches 22°C(71.6°F).

• The operation diagram is as following.

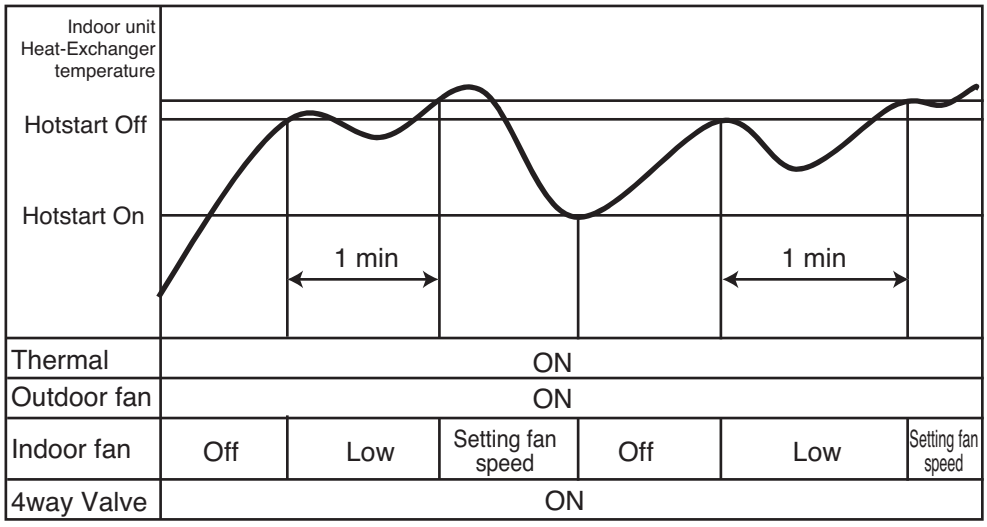

• Initial Hotstart On state

① Power Off ➠ On
② Operation Off ➠ On
③ Cooling operation ➠ Heating operation
④ Defrost operation

	High Static			Low Static				Convertible	
Chassis	BH	BG	BR	B1	B2	CE	CF	VE	VJ
Hotstart On T_{On}	19°C(66°F)	19°C(66°F)	19°C(66°F)	19°C(66°F)	19°C(66°F)	19°C(66°F)	19°C(66°F)	26°C(78°F)	26°C(78°F)
Hotstart Off T_{Off}	22°C(72°F)	22°C(72°F)	22°C(72°F)	22°C(72°F)	22°C(72°F)	22°C(72°F)	22°C(72°F)	27°C(80°F)	27°C(80°F)
Low temperature T_{LT}	25°C(76°F)	25°C(76°F)	25°C(76°F)	25°C(76°F)	25°C(76°F)	25°C(76°F)	25°C(76°F)	28°C(82°F)	28°C(82°F)
Setting Temperature T_{ST}	27°C(80°F)	27°C(80°F)	27°C(80°F)	27°C(80°F)	27°C(80°F)	27°C(80°F)	27°C(80°F)	30°C(86°F)	30°C(86°F)

Copyright ©2010 LG Electronics. Inc. All right reserved.
Only for training and service purposes

LGE Internal Use Only

■ Heater Operation

• The unit will operate according to the setting temperature and the indoor unit Heat-Exchanger temperature.

• Heater operation diagram is shown as following.

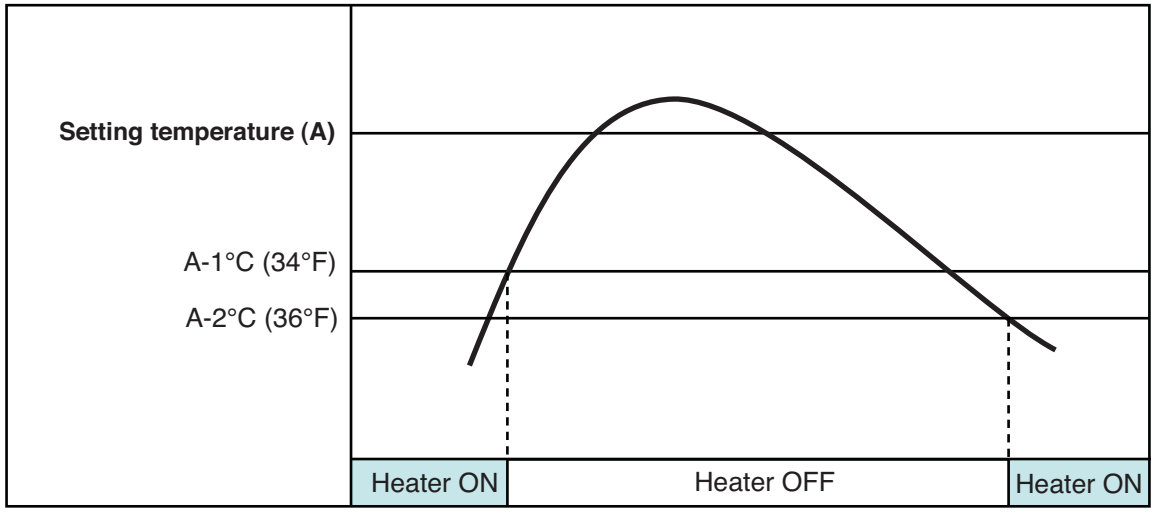

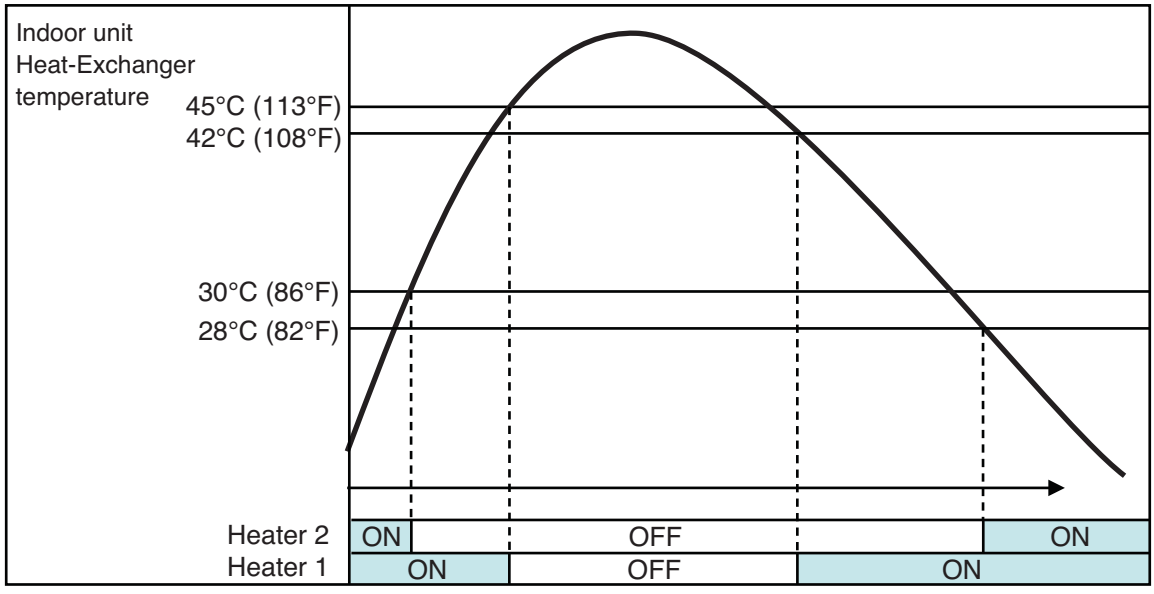

Copyright ©2010 LG Electronics. Inc. All right reserved.
Only for training and service purposes

LGE Internal Use Only

3. Dimensions

Vertical Air Handling Unit

ARNU183NJA2
ARNU243NJA2
ARNU303NJA2
ARNU363NJA2

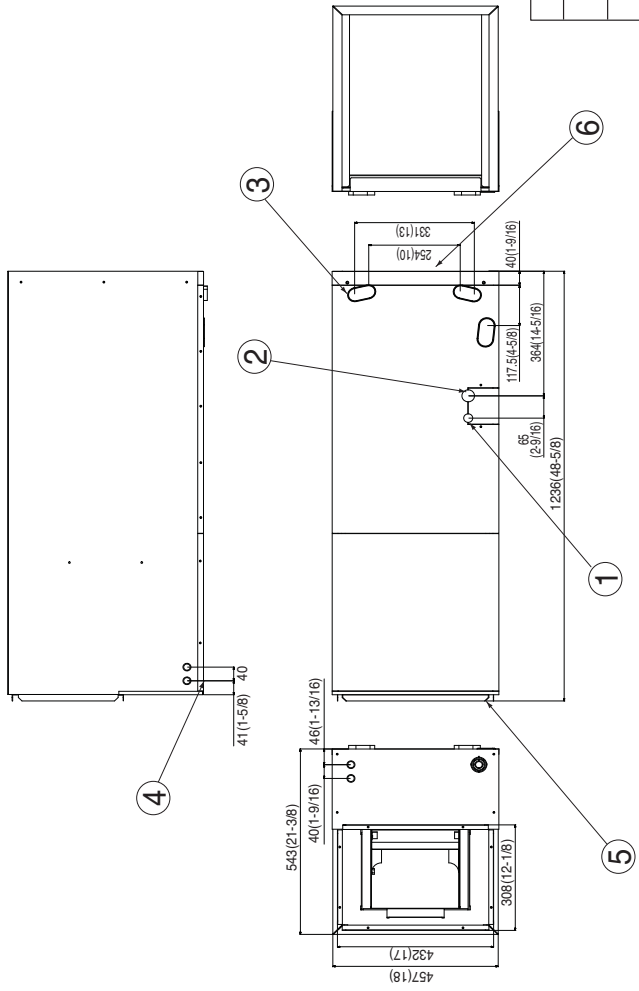

[Unit : mm(inch)]

Number	Name	Description
1	Liquid pipe connection	Unit size(18k):ø6.35(1/4) Unit size(24k,30k):ø9.52(3/8)
2	Gas pipe connection	Unit size(18k):ø12.7(1/2) Unit size(24k,30k):ø15.88(5/8)
3	Drain pipe connection	
4	Power supply connection	
5	Air discharge	
6	Air suction	

▣ Note

1. Unit should be installed in compliance with the installation manual in the product box.
2. Unit shall be grounded in accordance with the local regulations or applicable national codes.

LG Electronics

LG Electronics USA, HVAC Division
1000 Sylvan Avenue, Englewood Cliffs, NJ 07632
www.lgusa.com / www.lghvac.com

76, Seongsan-dong, Changwon City, Gyeongnam,
641-713, Korea
www.lgeaircon.com

CHASSIS CODE: NJ

Copyright ©2010 LG Electronics. Inc. All right reserved.
Only for training and service purposes

LGE Internal Use Only

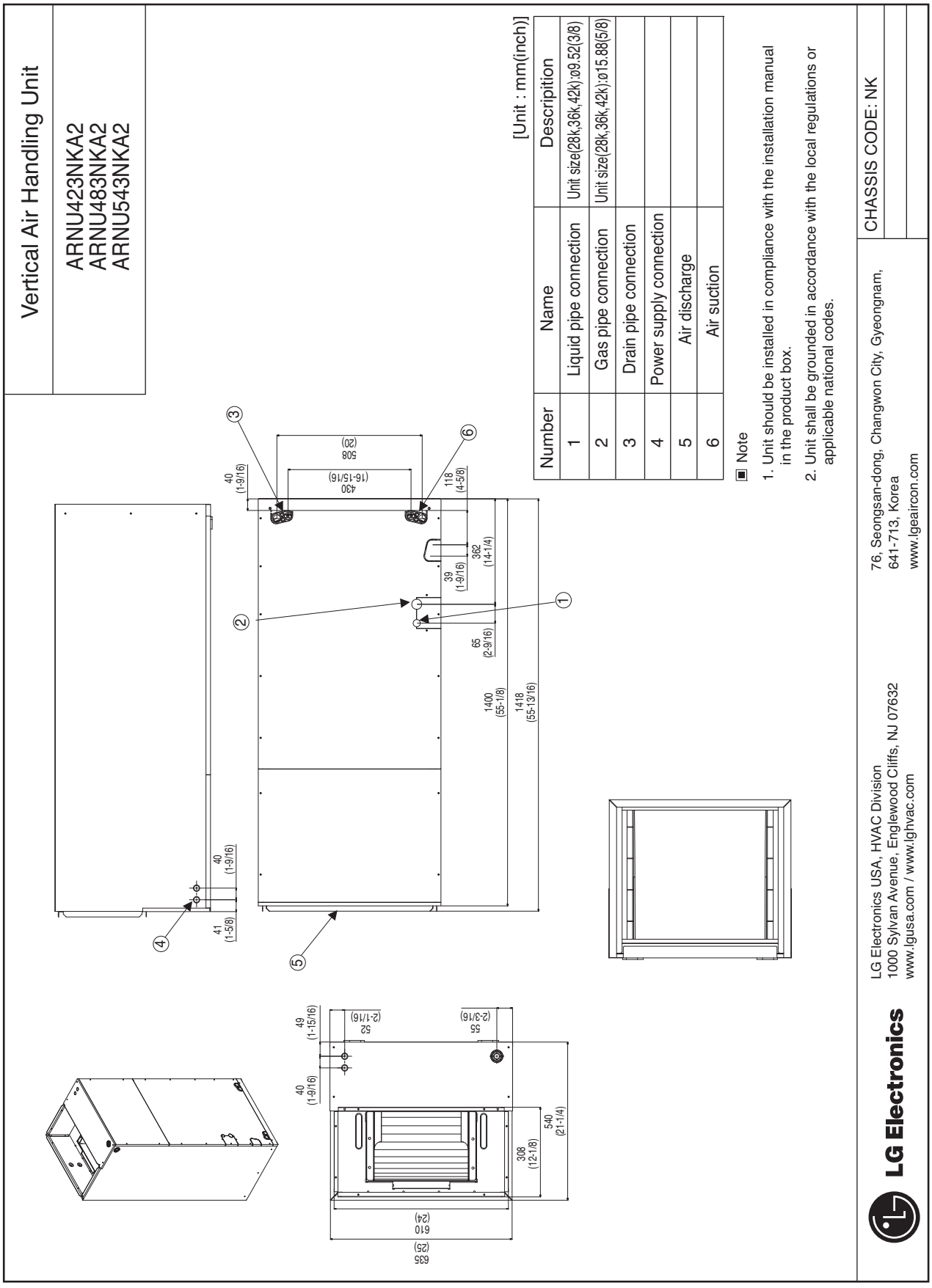

Copyright ©2010 LG Electronics. Inc. All right reserved.
Only for training and service purposes

LGE Internal Use Only

Part 3
Trouble shooting guide

Copyright ©2010 LG Electronics. Inc. All right reserved.
Only for training and service purposes

LGE Internal Use Only

Trouble shooting guide

Self-diagnosis function 111

Copyright ©2010 LG Electronics. Inc. All right reserved.
Only for training and service purposes

LGE Internal Use Only

Self-diagnosis function

Self-Diagnosis Function

Error Indicator

- This function indicates types of failure in self-diagnosis and occurrence of failure for air condition.
- Error mark is displayed on display window of indoor units and wired remote controller, and 7-segment LED of outdoor unit control board as shown in the table.
- If more than two troubles occur simultaneously, lower number of error code is first displayed.
- After error occurrence, if error is released, error LED is also released simultaneously.

Error Display

1st,2nd LED of 7-segment indicates error number, 3rd LED indicates unit number.

Ex) 211 : No.21 error of master unit
213 : No.21 error of slave2
011 → 051 : No.105 error of master unit

	Display			Title	Cause of Error
Indoor unit related error	0	1	-	Air temperature sensor of indoor unit	Air temperature sensor of indoor unit is open or short
	0	2	-	Inlet pipe temperature sensor of indoor unit	Inlet pipe temperature sensor of indoor unit is open or short
	0	3	-	Transmission error : wired remote controller indoor unit	Failing to receive wired remote controller signal in indoor unit PCB
	0	4	-	Drain pump	Malfunction of drain pump
	0	5	-	Transmission error : outdoor unit indoor unit	Failing to receive outdoor unit signal in indoor unit PCB
	0	6	-	Outlet pipe temperature sensor of indoor unit	Outlet pipe temperature sensor of indoor unit is open or short
	0	7	-	Different operation mode	Operation mode between indoor unit and outdoor unit is different
	0	9	-	Serial No.	In case when the serial number marked onEEPROM of Indoor unit is 0 or FFFFFF
	1	0	-	Poor fan motor operation	Disconnecting the fan motor connector/Failure of indoor fan motor lock
					Air temperature sensor of indoor unit is open or short

Copyright ©2010 LG Electronics. Inc. All right reserved.
Only for training and service purposes

LGE Internal Use Only

Error No.	Error Type	Error Point	Main Reasons
01	Indoor unit air sensor error	Indoor unit sensor is open/short	1. Indoor unit PCB wrong connection 2. Indoor unit PCB failure 3. Sensor problem (main reason)
02	Indoor unit pipe inlet sensor error		
06	Indoor unit pipe outlet sensor error		

■ Error diagnosis and countermeasure flow chart

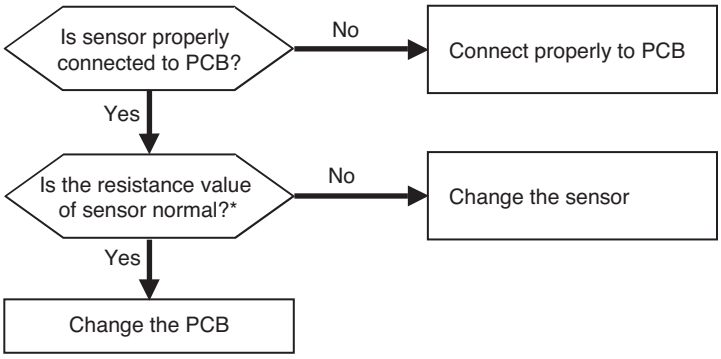

** In case the value is more than 100kΩ (open) or less than 100Ω (short), Error occurs

Refer: Resistance value maybe change according to temperature of temp sensor,
It shows according to criteria of current temperature(±5% margin) ➔ Normal
Air temp sensor: 10°C(50°F) = 20.7kΩ : 25°C(76°F)= 10kΩ : 50°C(122°F)= 3.4kΩ
Pipe temp sensor: 10°C(50°F) = 10kΩ : 25°C(76°F)= 5kΩ : 50°C(122°F)= 1.8kΩ

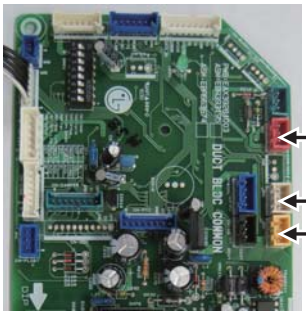

<Fresh Air Intake Unit>

<Standard Indoor Unit>

Copyright ©2010 LG Electronics. Inc. All right reserved.
Only for training and service purposes

LGE Internal Use Only

Error No.	Error Type	Error Point	Main Reasons
03	No transmission between cabled remote controller & indoor unit	The remote controller did not receive the signal from indoor unit during specific time	1. Remote controller fault 2. Indoor unit PCB fault 3. Connector fault, Wrong connection 4. transmission cable problem

■ Error diagnosis and countermeasure flow chart

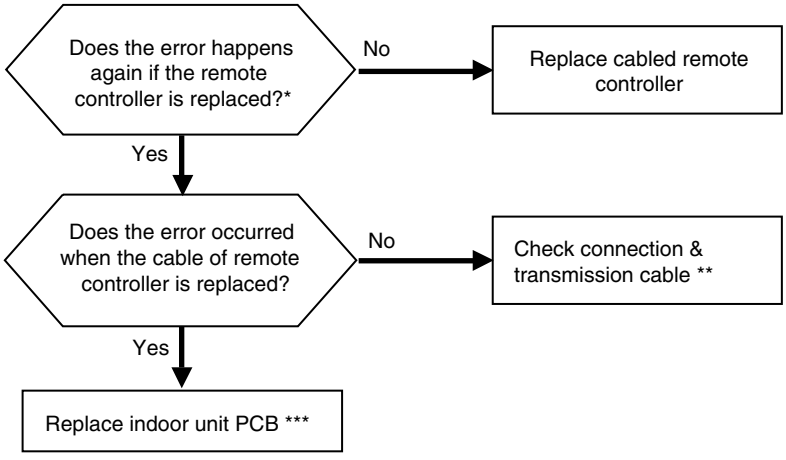

* If there is no remote controller to replace : Use another unit's remote controller doing well

** Check cable : Contact failure of connected portion or extension of cable are main cause
Check any surrounded noise (check the distance with main power cable)
➔ make safe distance from the devices generate electromagnetic wave

*** After replacing indoor unit PCB, do Auto Addressing & input unit's address if connected to central controller.
(All the indoor units connected should be turned on before Auto Addressing

CN-REMO : Remote controller connection

※ The PCB can differ from model to model.
Check from the right source.

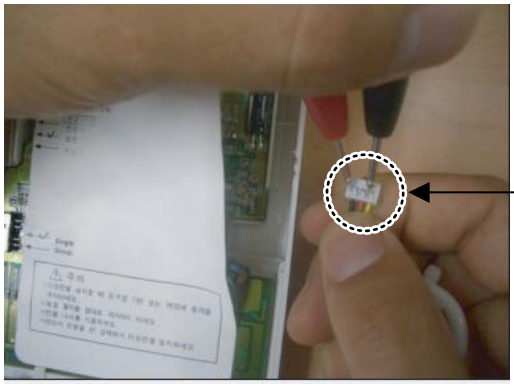

Checking transmission cable connection status

Copyright ©2010 LG Electronics. Inc. All right reserved.
Only for training and service purposes

LGE Internal Use Only

Error No.	Error Type	Error Point	Main Reasons
04	Drain pump error	Float switch is open due to rising of condensate water level because of drain pump fault or drain pipe clogging	1. Drain pump/float switch fault 2. Improper drain pipe location, clogging of drain pipe 3. Indoor unit PCB fault

■ Error diagnosis and countermeasure flow chart

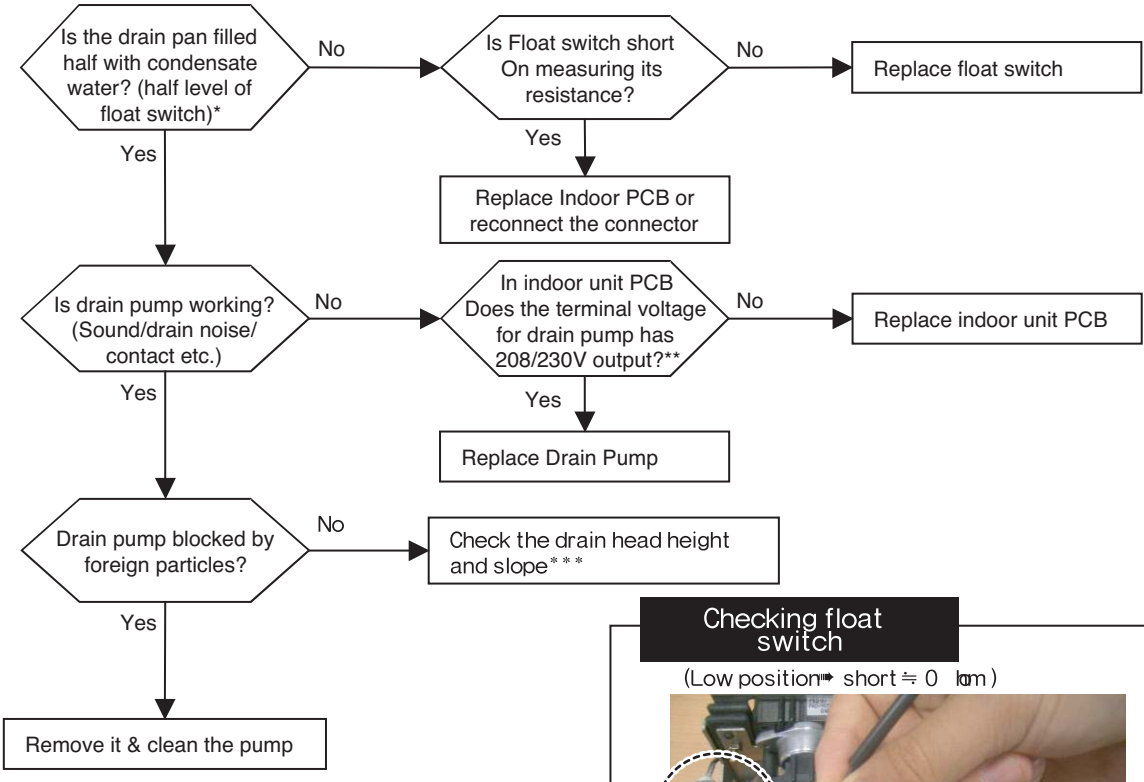

* If the float goes up higher than a half of float switch then the circuit is open & the unit is stopped automatically.

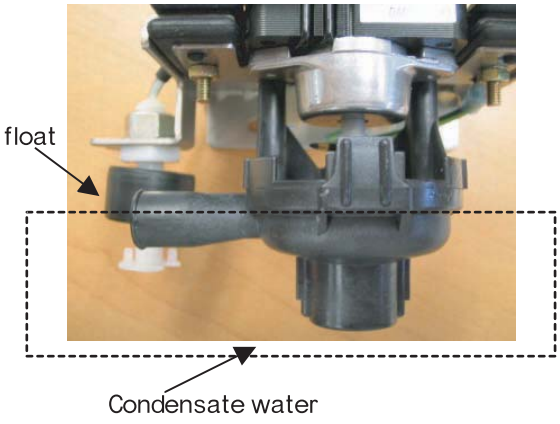

Checking float switch

(Low position ➠ short ≒ 0 Ω)

(High position ➠ Open)

Copyright ©2010 LG Electronics. Inc. All right reserved.
Only for training and service purposes

LGE Internal Use Only

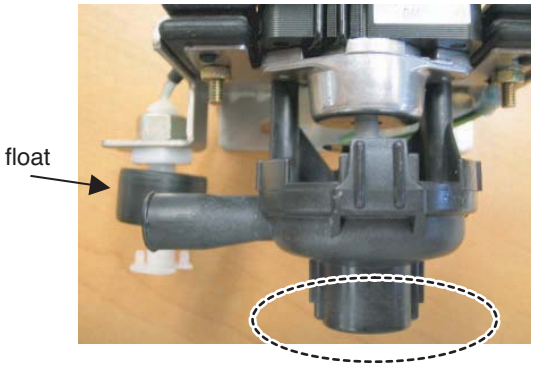

A:Point to check rotating

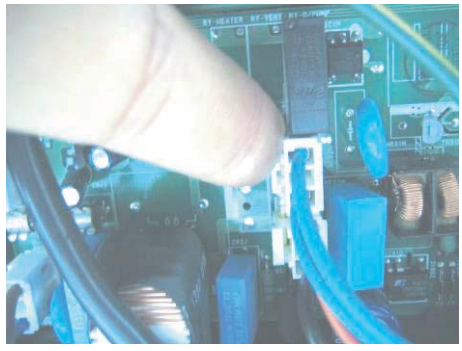

*** Indoor PCB drain pump connector
(Check input of 208/230V)
(Marked as **CN-DPUMP)**

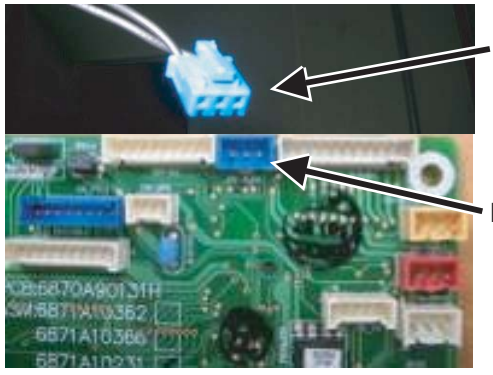

[***] Standard of drain pipe head height / slope

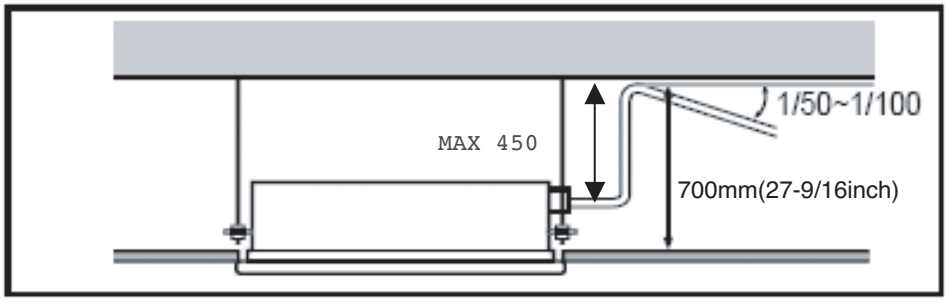

Copyright ©2010 LG Electronics. Inc. All right reserved.
Only for training and service purposes

LGE Internal Use Only

Error No.	Error Type	Error Point	Main Reasons
05	Indoor & Outdoor unit transmission error	No signal transmission between indoor & outdoor units.	1. Auto addressing is not done 2. transmission cable is not connected 3. Short circuit of transmission cable 4. Indoor unit transmission circuit fault 5. Outdoor unit transmission circuit fault 6. Not enough distance between power and transmission cable?

■ Error diagnosis and countermeasure flow chart

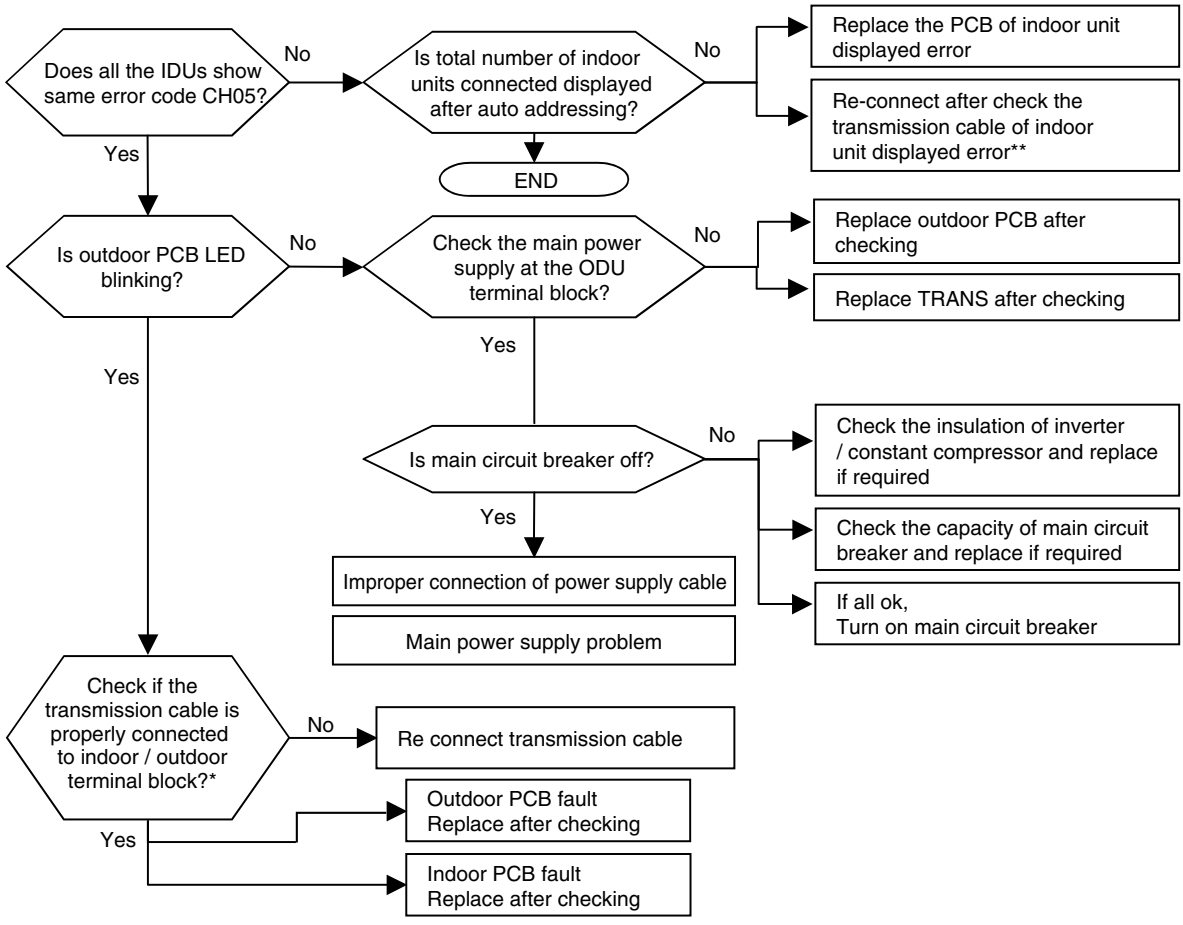

* (Note1) Transmission from IDU is normal if voltage fluctuation(-9V ~ +9V) exists when checking DC voltage of communication terminal between IDU and ODU

* If the DC voltage between transmission terminal A, B of indoor unit is fluctuate within (-9V~+9V) then transmission from outdoor unit is normal

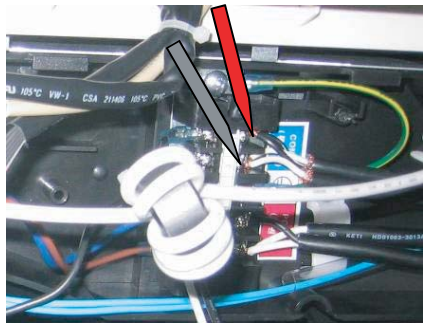

Copyright ©2010 LG Electronics. Inc. All right reserved.
Only for training and service purposes

LGE Internal Use Only

Error No.	Error Type	Error Point	Main Reasons
06	Indoor unit outlet pipe temperature sensor error	Indoor unit outlet pipe temperature sensor open or short	Refer to CH02

Error No.	Error Type	Error Point	Main Reasons
07	All Indoor units are not running in same mode	The Indoor units started later are operated in different mode from earlier one.	1. Indoor units are in different mode 2. PCB fault 3. cabled remote controller fault ※ Checking ch07 method IDU doesn't operate as Operation mode is flickering at IDU wired remote controller and IDU display window.

■ Error diagnosis and countermeasure flow chart

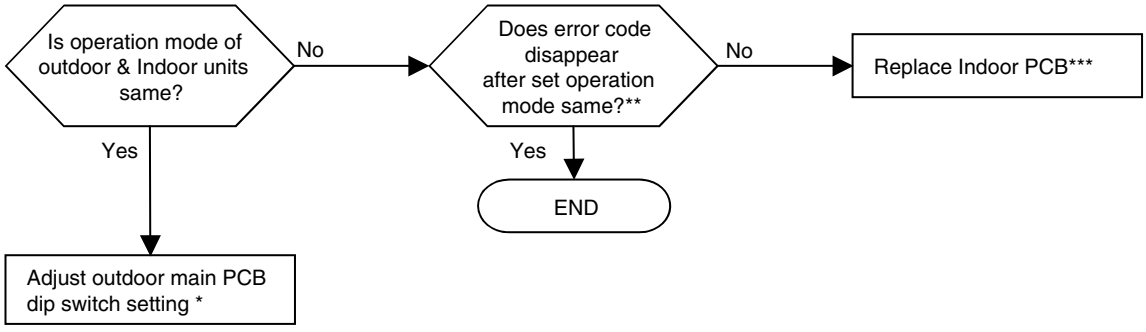

* Check mode selection setting of wired remote controller.

** Outdoor main PCB dip switch no.5 (Cooling) or no.6 (heating) is in On, different mode operation error may occur because the operation mode is fixed by dip switch setting.

♦ Dip switch Setting ♦

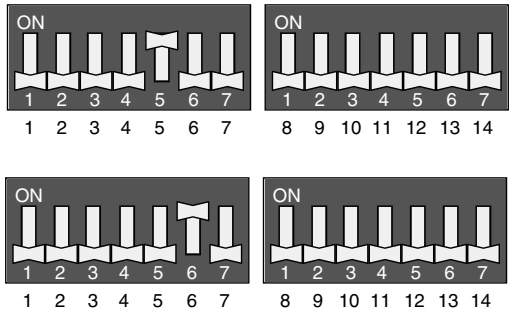

*** Dissolution method CH07 with remote controller

1) Error removal method : Turn off remote controller by pressing the On/Off button on the cabled remote controller.
The error code will be removed automatically after few seconds.
With cableless remote controller: Turn off indoor unit, and then turn on by changing the operation mode. The error will disappear.

Copyright ©2010 LG Electronics. Inc. All right reserved.
Only for training and service purposes

LGE Internal Use Only

**** After replacing the indoor unit PCB, make sure to be done to do Auto addressing and input the address of central control

***** If ODU Dry Contact function is set , different mode operation error may be occurred because the operation mode is fixed.

Error No.	Error Type	Error Point	Main Reasons
09	Indoor unit EEPROM error		1. Error developed in transmission between the micro- processor and the EEPROM on the surface of the PCB. 2. ERROR due to the EEPROM damage

■ Error diagnosis and countermeasure flow chart

- Replace the indoor unit PCB, and then make sure to perform Auto addressing and input the address of central control

Copyright ©2010 LG Electronics. Inc. All right reserved.
Only for training and service purposes

LGE Internal Use Only

Error No.	Error Type	Error Point	Main Reasons
10	Indoor unit BLDC fan motor failure	Indoor BLDC fan motor feedback signal is absent (for 50 sec.)	1. Motor connector connection fault 2. Indoor PCB fault 3. Motor fault

■ Error diagnosis and countermeasure flow chart

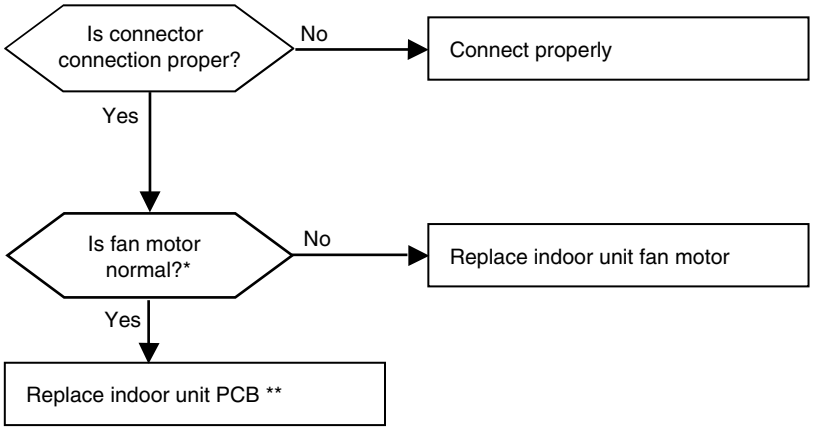

* It is normal when check hall sensor of indoor fan motor as shown below

Each termainl with the tester

Tester		Normal resistance(±10%)	
+	-	TH chassis	TD chassis
①	④	∞	∞
⑤	④	hundreds kΩ	hundreds kΩ
⑥	④	∞	∞
⑦	④	hundreds kΩ	hundreds kΩ

<Checking connection state of fan motor connector>

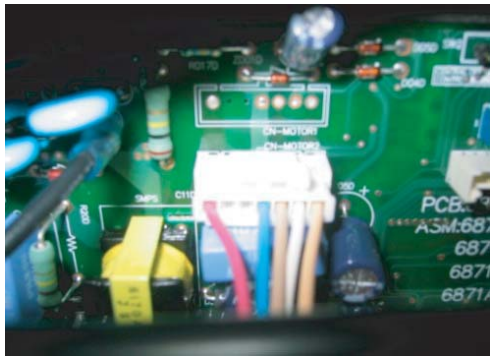

** Replace the indoor unit PCB, and then make sure to do Auto addressing and input the address of central control
(Notice: The connection of motor connector to PCB should be done under no power supplying to PCB)

Copyright ©2010 LG Electronics. Inc. All right reserved.
Only for training and service purposes

LGE Internal Use Only

P/NO : MFL50459505

NOVEMBER, 2010